Микрокомпактный LOCC-Box

Технические характеристики

По вопросам продаж и поддержки обращайтесь:

Алматы (727)345-47-04
Ангарск (3955)60-70-56
Архангельск (8182)63-90-72
Астрахань (8512)99-46-04
Барнаул (3852)73-04-60
Белгород (4722)40-23-64
Благовещенск (4162)22-76-07
Брянск (4832)59-03-52
Владивосток (423)249-28-31
Владикавказ (8672)28-90-48
Владимир (4922)49-43-18
Волгоград (844)278-03-48
Вологда (8172)26-41-59
Воронеж (473)204-51-73
Екатеринбург (343)384-55-89
Иваново (4932)77-34-06
Ижевск (3412)26-03-58
Иркутск (395)279-98-46
Казань (843)206-01-48
Калининград (4012)72-03-81
Калуга (4842)92-23-67
Кемерово (3842)65-04-62
Киров (8332)68-02-04
Коломна (4966)23-41-49
Кострома (4942)77-07-48
Краснодар (861)203-40-90
Красноярск (391)204-63-61
Курск (4712)77-13-04
Курган (3522)50-90-47
Липецк (4742)52-20-81
Магнитогорск (3519)55-03-13
Москва (495)268-04-70
Мурманск (8152)59-64-93
Набережные Челны (8552)20-53-41
Нижний Новгород (831)429-08-12
Новокузнецк (3843)20-46-81
Ноябрьск (3496)41-32-12
Новосибирск (383)227-86-73
Омск (3812)21-46-40
Орел (4862)44-53-42
Оренбург (3532)37-68-04
Пенза (8412)22-31-16
Петрозаводск (8142)55-98-37
Псков (8112)59-10-37
Пермь (342)205-81-47
Ростов-на-Дону (863)308-18-15
Рязань (4912)46-61-64
Самара (846)206-03-16
Санкт-Петербург (812)309-46-40
Саратов (845)249-38-78
Севастополь (8692)22-31-93
Саранск (8342)22-96-24
Симферополь (3652)67-13-56
Смоленск (4812)29-41-54
Сочи (862)225-72-31
Ставрополь (8652)20-65-13
Сургут (3462)77-98-35
Сыктывкар (8212)25-95-17
Тамбов (4752)50-40-97
Тверь (4822)63-31-35
Тольятти (8482)63-91-07
Томск (3822)98-41-53
Тула (4872)33-79-87
Тюмень (3452)66-21-18
Ульяновск (8422)24-23-59
Улан-Удэ (3012)59-97-51
Уфа (347)229-48-12
Хабаровск (4212)92-98-04
Чебоксары (8352)28-53-07
Челябинск (351)202-03-61
Череповец (8202)49-02-64
Чита (3022)38-34-83
Якутск (4112)23-90-97
Ярославль (4852)69-52-93

Россия +7(495)268-04-70
Казахстан +7(727)345-47-04
Беларусь +(375)257-127-884
Узбекистан +998(71)205-18-59
Киргизия +996(312)96-26-47

эл.почта: ezd@nt-rt.ru || сайт: https://lutze.nt-rt.ru/

Technical data sheet

Load monitoring · LOCC-Box-FB

Electronic circuit breaker rated up to DC 10 A
Single-channel design, adjustable current range: DC 1 A – 10 A
Adjustable characteristics, fast, medium, slow 1, -2, -3

Identification

Type	LOCC-Box-FB 7-6400
Part No.	716400

Product version

Hardware revision	2.0
Software version	2.6
Datasheet version	04

Input

Type of function	1-channel 1 pin switching
Rated voltage U_N	DC 12/24 V
Operation voltage range	DC 10–30 V
Rated current I_N	DC 10 A
Supply current	DC 40 A over Cu-rails 10 × 3 mm
Reverse voltage protection	Internal electronics
Connection type input	Screwless contact slide

Control input (Set / Reset)

Signal level	DC 12/24 V acc. to EN 61131
OFF	Pulse with falling edge >100 ms, <800 ms
ON	Pulse with falling edge > 1 s

Output

Switching element	MOSFET

Output current	Max. DC 10 A
Voltage drop	Max. 215 mV (10 A)
Status display output	LED green: operating voltage present, no error LED red: error in load circuit
Switch-on capacity	10000 µF
Current range	1 A – 10 A (adjustable via switch in 1 A steps)
Characteristic	Fast (1), medium (2), slow 1 (3), slow 2 (4), slow 3 (5) see ’characteristic curves’

Signal output

Signal level	DC 12/24 V: operating voltage on standby, no error, DC 0 V: error, output switched off
Switching element	Transistor, collector with pull-up resistance

General

Dimensions (w × h × d)	8.1 mm × 107.4 mm × 116.0 mm
Housing material	PA 6.6 (UL 94 V-0, NFF I2, F2)
Color of the housing	Basalt grey
Mounting	DIN rail mountable TS35 (EN 60715)
Installation position	Any
MTBF	690000 h
Degree of protection	IP20 (only as complete system with supply terminal and end block)
Connection type	Push-In 0.25 mm² – 2.5 mm² AWG 24 – AWG 14
Weight/unit	0.07 kg
PU (units)	1

General ambient conditions

Operation temperature range	-25 °C . . . +50 °C
Storage temperature range	-40 °C . . . +85 °C
Relative air humidity	10 % – 95 %, without condensation
Vibration resistance	4 g acc. to EN 60068-2-6
Shock resistance	15 g acc. EN 60068-2-27

Certifications/Standards

Conformity	CE UKCA
Certifications	cULus (E135145) URus (E490188)

Dimensions

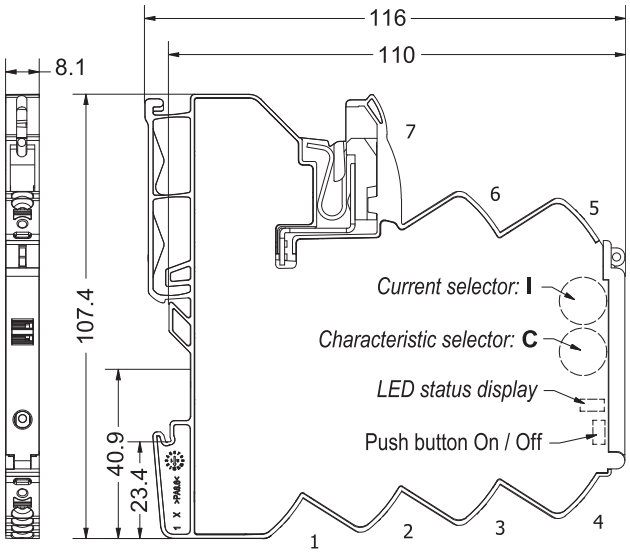

PIN assignment

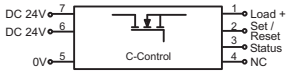

1: + Output
2: Control input (Set/Reset)
3: Status output
4: NC
5: 0V
6: + Supply (alternative)
7: + Supply

1: Characteristic fast

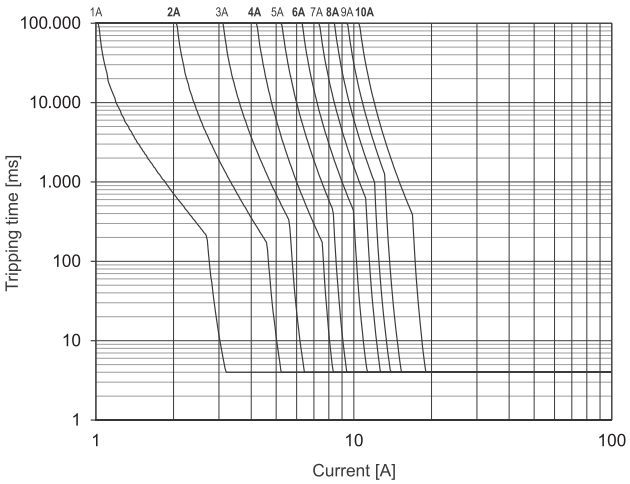

2: Characteristic medium

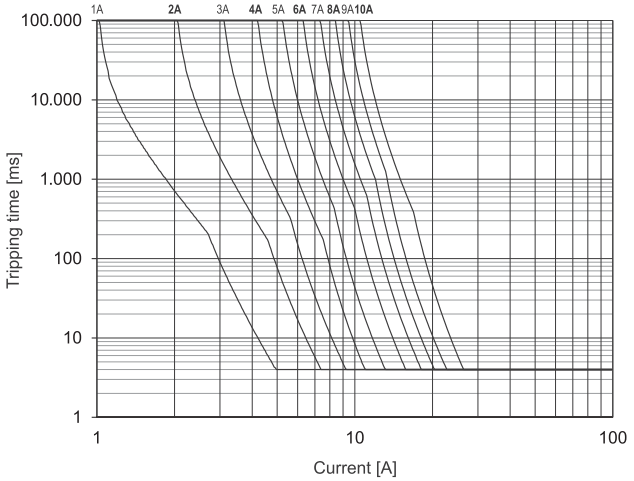

3: Characteristic slow-1

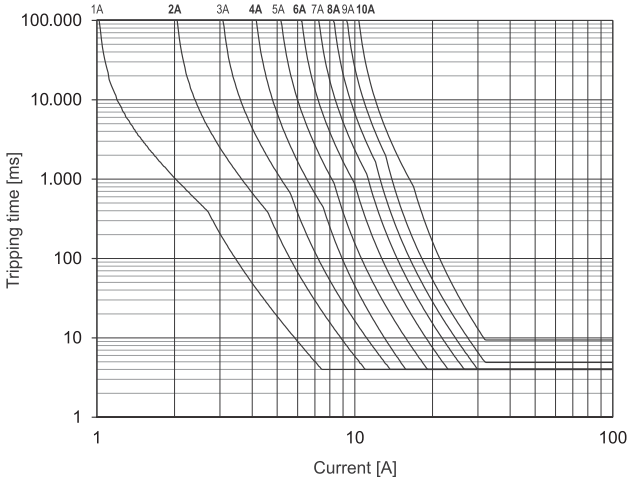

4: Characteristic slow-2

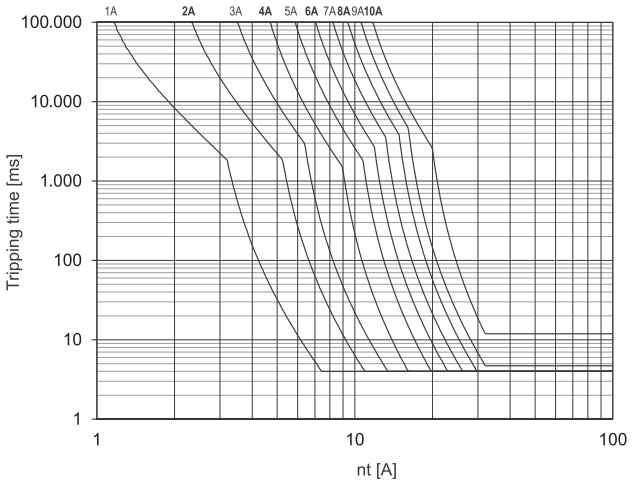

5: Characteristic slow-3

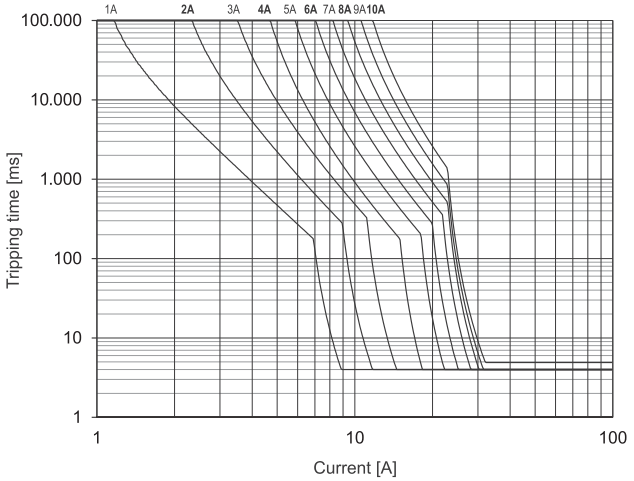

Use

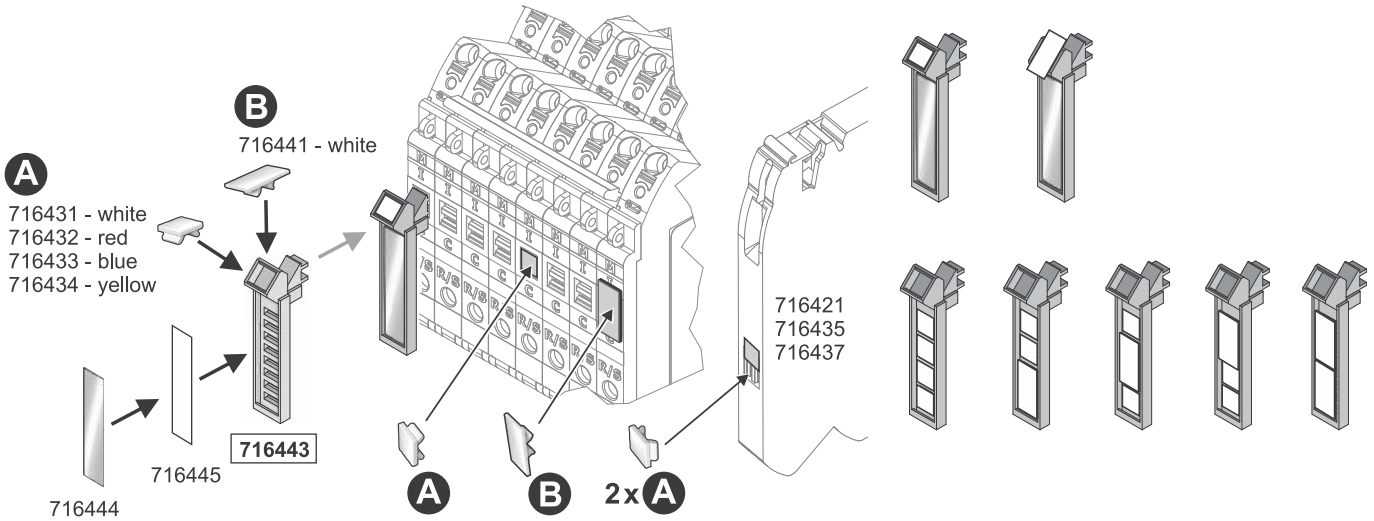

LED status

LED Status, Button, Rotary Switch

LED green	*ON*	*Function is OK**
LED green, flashing 1 Hz	*Overload*	*Load above 90 % of I nominal*
LED green, flashing 5 Hz	*Overload*	*Load above 100 % of I nominal*
LED red	*OFF*	*Module switched off or acknowledged**
LED red, flashing 1 Hz	*Overload*	*Output off due to overload/short circuit**
LED red, flashing 5 Hz	*Error*	*Wiring error – feedback (internal error)*
LED red, flashing shortly	*OFF*	*Output off via remote set/reset*
LED red/green, flashing 1 Hz	*ON*	*Target settings via rotary switch deviate from actual settings.* ***NOTICE: Switching off and on via pushbutton required.***
*Button ****	*ON/OFF*	*Nominal operation: ON/OFF* *Load monitoring tripped: 1st push: acknowledge* *2nd push: ON*
*Rotary Switch (I) – Switch Position***	*Rated current, see page 4.*	
*Rotary Switch (C) – Switch Position***	*Characteristic: 1: fast 2: middle* *3: slow-1 4: slow-2 5: slow-3*	

** If the operating voltage is switched off, the last status is saved (Default).*
button, not by Remote Set/Reset
nly be switched on

ructions

Signal output

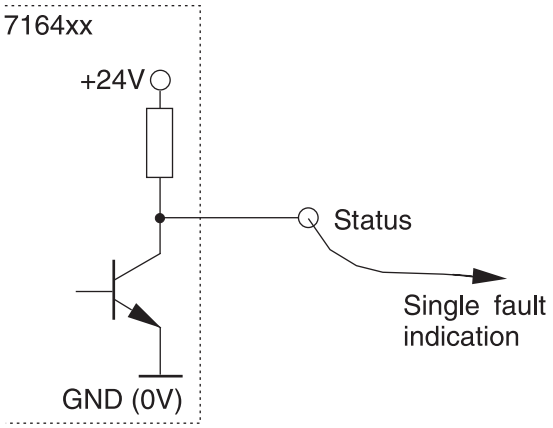

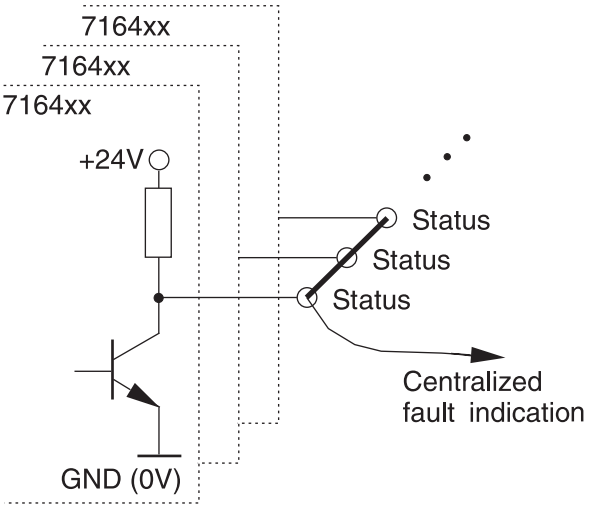

Mounting diagram

HINWEIS / NOTICE / AVIS

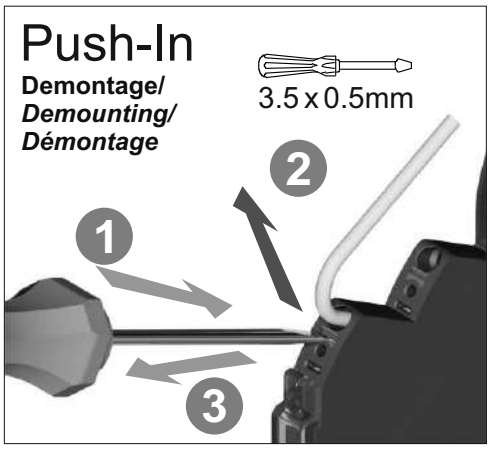

Technical data sheet

Load monitoring · LOCC-Box-FB

Electronic circuit breaker rated up to DC 10 A
Single-channel design, adjustable current range: DC 1 A – 10 A
Adjustable characteristics, fast, medium, slow 1, -2, -3

Identification

Type	LOCC-Box-FB 7-6401
Part No.	716401

Product version

Hardware revision	2.0
Software version	2.6
Datasheet version	08

Input

Type of function	1-channel 1 pin switching
Rated voltage U_N	DC 12/24 V
Operation voltage range	DC 10–30 V
Rated current I_N	DC 10 A
Supply current	DC 40 A over Cu-rails 10 × 3 mm
Reverse voltage protection	Internal electronics
Connection type input	Screwless contact slide

Control input (Set / Reset)

Signal level	DC 12/24 V acc. to EN 61131
OFF	Pulse with falling edge >100 ms, <800 ms
ON	Pulse with falling edge > 1 s

Output

Switching element	MOSFET

Output current	Max. DC 10 A
Voltage drop	Max. 215 mV (10 A)
Status display output	LED green: operating voltage present, no error LED red: error in load circuit
Switch-on capacity	10000 µF
Current range	1 A – 10 A (adjustable via switch in 1 A steps)
Characteristic	Fast (1), medium (2), slow 1 (3), slow 2 (4), slow 3 (5) see ’characteristic curves’

Signal output

Signal level	DC 12/24 V: operating voltage on standby, no error, DC 0 V: error, output switched off or manual "OFF"
Switching element	Transistor, collector with pull-up resistance

General

Dimensions (w × h × d)	8.1 mm × 107.4 mm × 116.0 mm
Housing material	PA 6.6 (UL 94 V-0, NFF I2, F2)
Color of the housing	Basalt grey
Mounting	DIN rail mountable TS35 (EN 60715)
Installation position	Any
MTBF	690000 h
Degree of protection	IP20 (only as complete system with supply terminal and end block)
Connection type	Push-In 0.25 mm² – 2.5 mm² AWG 24 – AWG 14
Weight/unit	0.07 kg
PU (units)	1

General ambient conditions

Operation temperature range	-25 °C . . . +50 °C
Storage temperature range	-40 °C . . . +85 °C
Relative air humidity	10 % – 95 %, without condensation
Vibration resistance	4 g acc. to EN 60068-2-6
Shock resistance	15 g acc. EN 60068-2-27

Certifications/Standards

Conformity	CE UKCA
Certifications	cULus (E135145) URus (E490188)

Dimensions

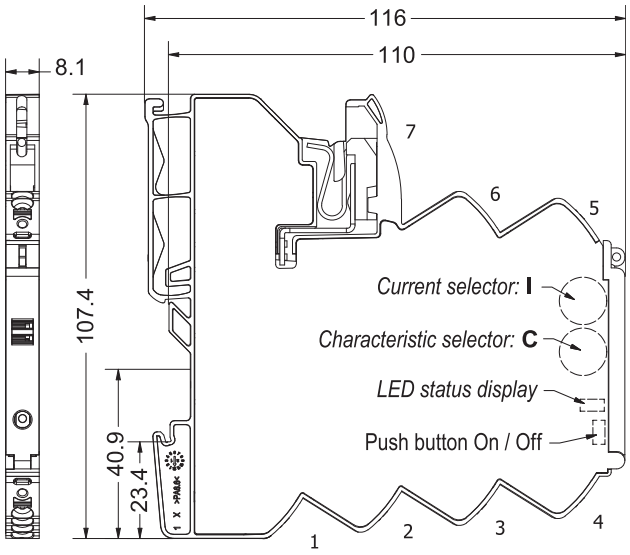

PIN assignment

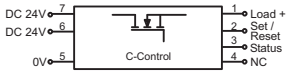

1: + Output
2: Control input (Set/Reset)
3: Status output
4: NC
5: 0V
6: + Supply (alternative)
7: + Supply

1: Characteristic fast

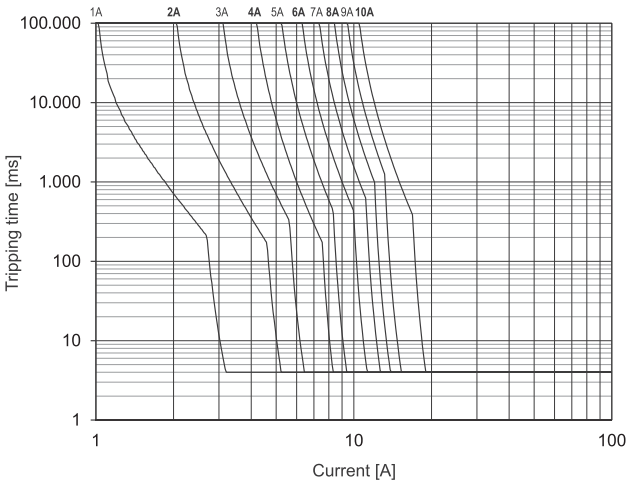

2: Characteristic medium

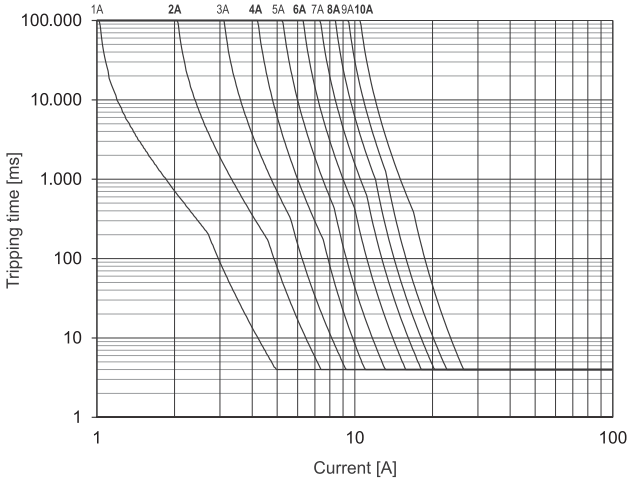

3: Characteristic slow-1

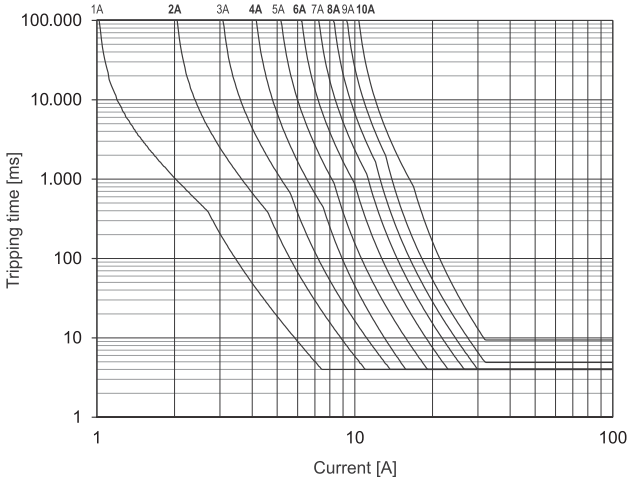

4: Characteristic slow-2

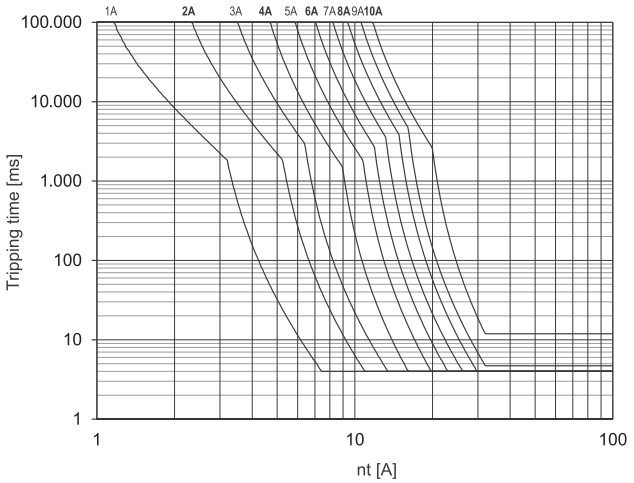

5: Characteristic slow-3

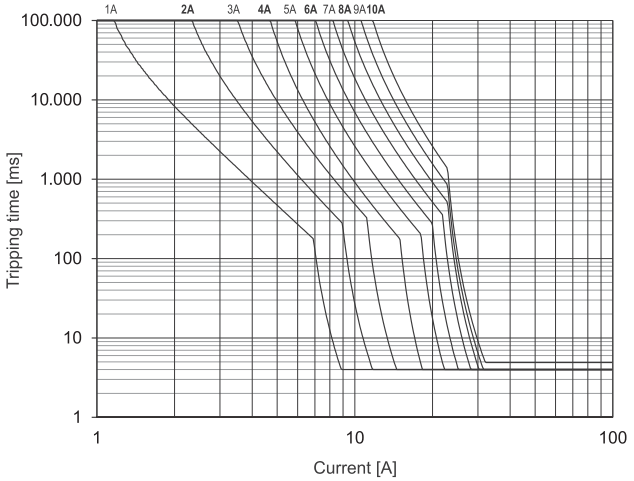

Use

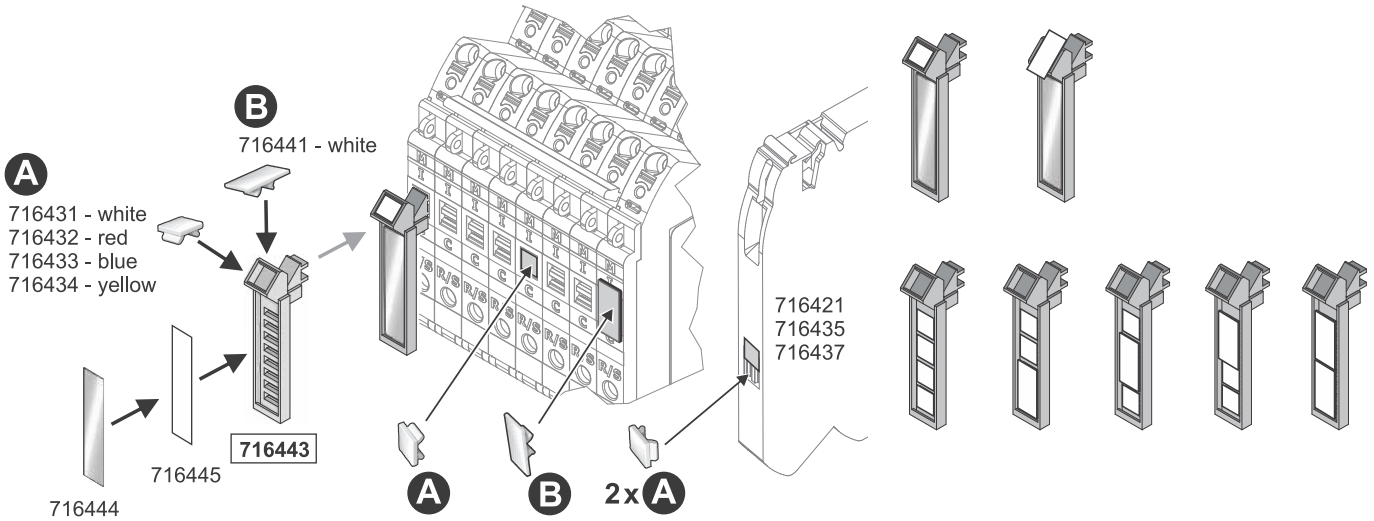

LED status

LED Status, Button, Rotary Switch

LED green	*ON*	*Function is OK**
LED green, flashing 1 Hz	*Overload*	*Load above 90 % of I nominal*
LED green, flashing 5 Hz	*Overload*	*Load above 100 % of I nominal*
LED red	*OFF*	*Module switched off or acknowledged**
LED red, flashing 1 Hz	*Overload*	*Output off due to overload/short circuit**
LED red, flashing 5 Hz	*Error*	*Wiring error – feedback (internal error)*
LED red, flashing shortly	*OFF*	*Output off via remote set/reset*
LED red/green, flashing 1 Hz	*ON*	*Target settings via rotary switch deviate from actual settings.* ***NOTICE: Switching off and on via pushbutton required.***
*Button ****	*ON/OFF*	*Nominal operation: ON/OFF* *Load monitoring tripped: 1st push: acknowledge* *2nd push: ON*
*Rotary Switch (I) – Switch Position***	*Rated current, see page 4.*	
*Rotary Switch (C) – Switch Position***	*Characteristic: 1: fast 2: middle* *3: slow-1 4: slow-2 5: slow-3*	

** If the operating voltage is switched off, the last status is saved (Default).*
button, not by Remote Set/Reset
nly be switched on

ructions

Signal output

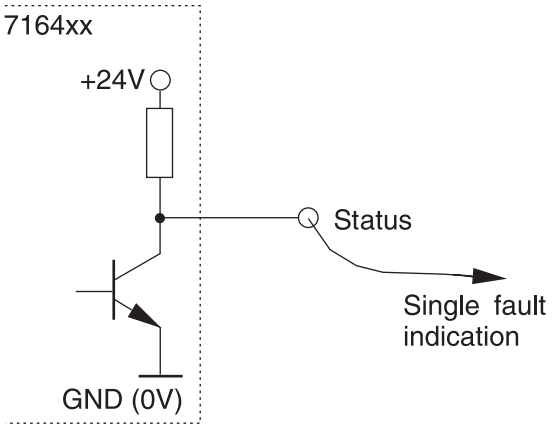

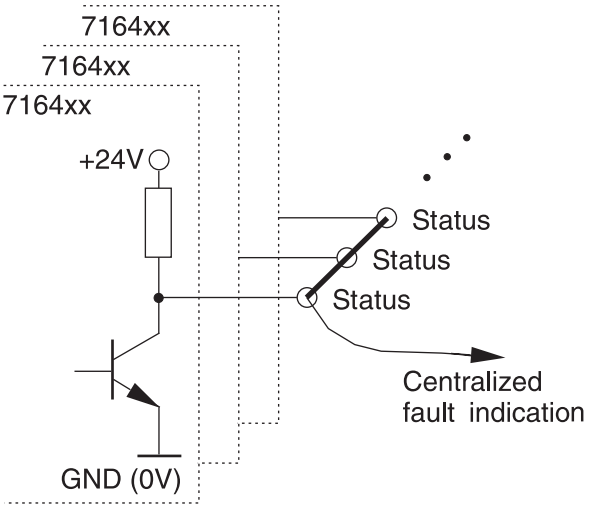

Mounting diagram

HINWEIS / NOTICE / AVIS

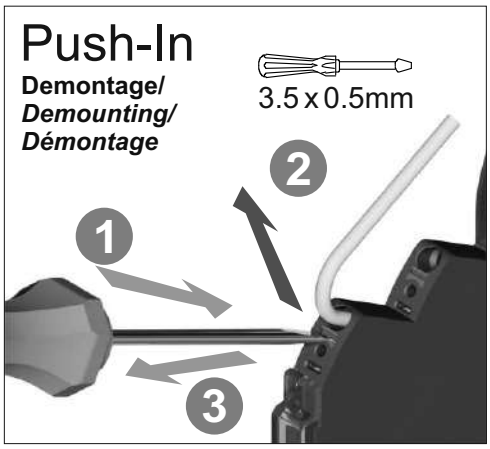

Technical data sheet

Load monitoring · LOCC-Box-FB

Electronic load monitoring up to DC 10 A
Single-channel design, Adjustable current range: DC 1 A – 10 A
Adjustable characteristics, fast, medium, slow 1, -2, -3

Identification

Type	LOCC-Box-FB 7-6401
Part No.	716401.0050

Product version

Hardware revision	2.0
Software version	2.6
Datasheet version	06

Input

Type of function	1-channel 1 pin switching
Rated voltage U_N	DC 12/24 V
Operation voltage range	DC 10–30 V
Rated current I_N	DC 10 A
Supply current	DC 40 A over Cu-rails 10 × 3 mm
Reverse voltage protection	Internal electronics
Connection type input	Screwless contact slide

Control input (Set / Reset)

Signal level	DC 12/24 V acc. to EN 61131
OFF	Pulse with falling edge >100 ms, <800 ms
ON	Pulse with falling edge > 1 s

Output

Switching element	MOSFET

Output current	Max. DC 10 A
Voltage drop	Max. 215 mV (10 A)
Status display output	LED green: operating voltage present, no error LED red: error in load circuit
Switch-on capacity	10000 µF
Current range	1 A – 10 A (adjustable via switch in 1 A steps)
Characteristic	Fast (1), medium (2), slow 1 (3), slow 2 (4), slow 3 (5) see ’characteristic curves’

Signal output

Signal level	DC 12/24 V: operating voltage on standby, no error, DC 0 V: error, output switched off or manual "OFF"
Switching element	Transistor, collector with pull-up resistance

General

Dimensions (w × h × d)	8.1 mm × 107.4 mm × 116.0 mm
Housing material	PA 6.6 (UL 94 V-0, NFF I2, F2)
Color of the housing	Basalt grey
Mounting	DIN rail mountable TS35 (EN 60715)
Installation position	Any
MTBF	690000 h
Degree of protection	IP20 (only as complete system with supply terminal and end block)
Connection type	Push-In 0.25 mm² – 2.5 mm² AWG 24 – AWG 14
Weight/unit	0.07 kg
PU (units)	50

General ambient conditions

Operation temperature range	-25 °C . . . +50 °C
Storage temperature range	-40 °C . . . +85 °C
Relative air humidity	10 % – 95 %, without condensation
Vibration resistance	4 g acc. to EN 60068-2-6
Shock resistance	15 g acc. EN 60068-2-27

Certifications/Standards

Conformity	CE UKCA
Certifications	cULus (E135145) URus (E490188)

Dimensions

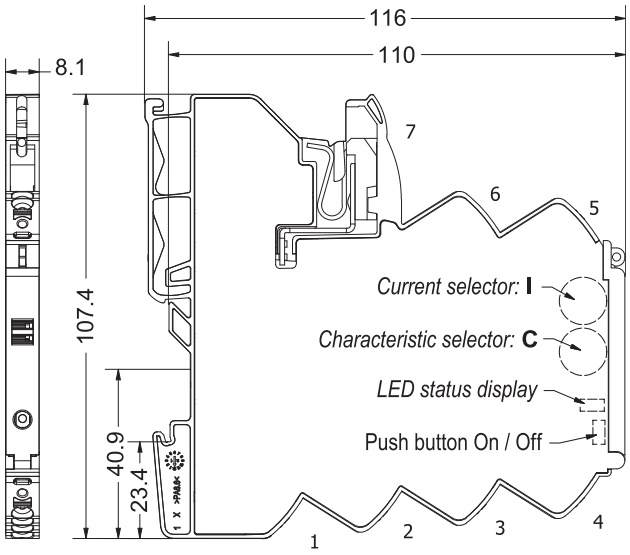

PIN assignment

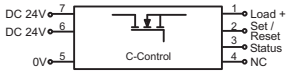

1: + Output
2: Control input (Set/Reset)
3: Status output
4: NC
5: 0V
6: + Supply (alternative)
7: + Supply

1: Characteristic fast

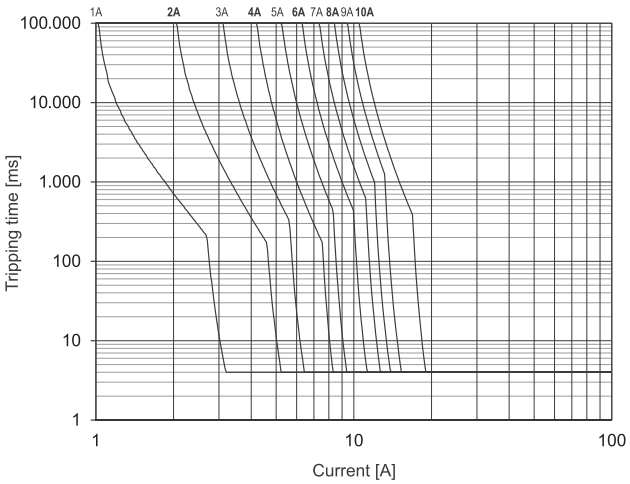

2: Characteristic medium

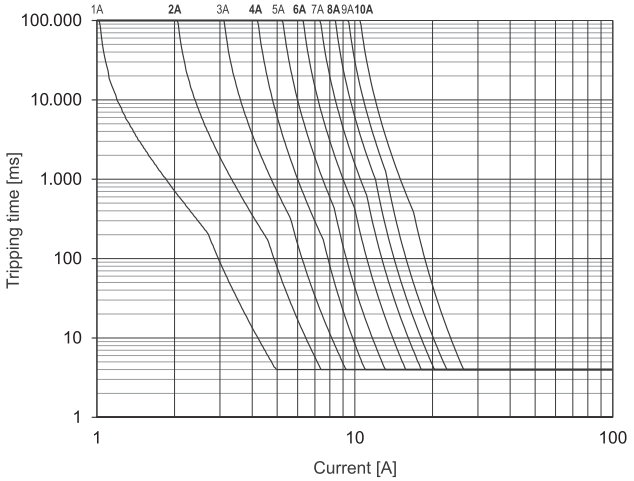

3: Characteristic slow-1

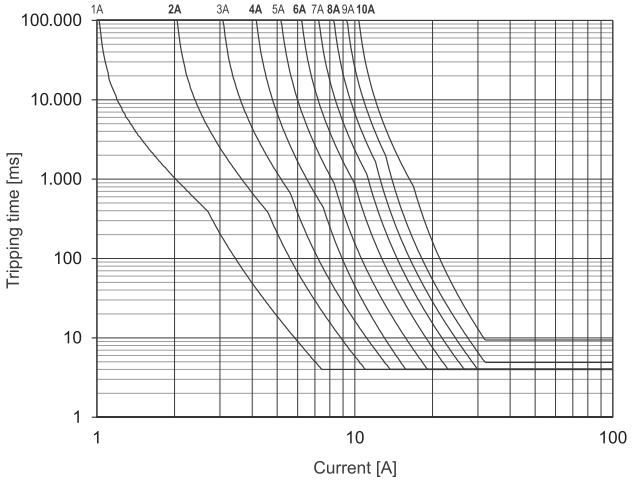

4: Characteristic slow-2

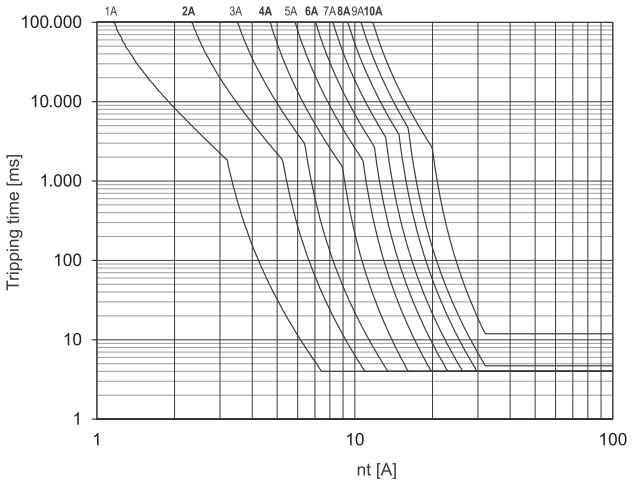

5: Characteristic slow-3

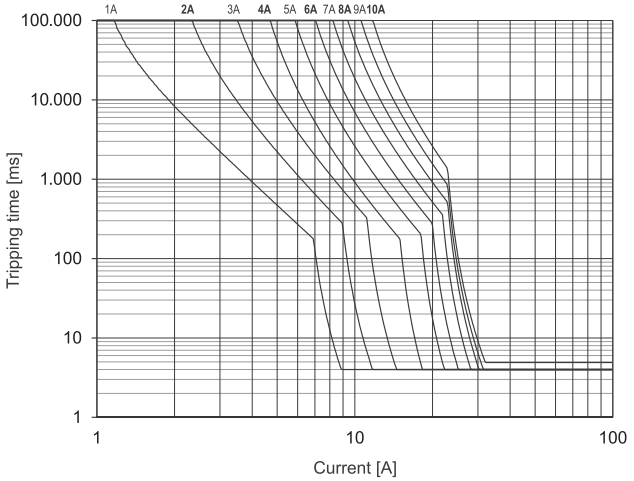

Use

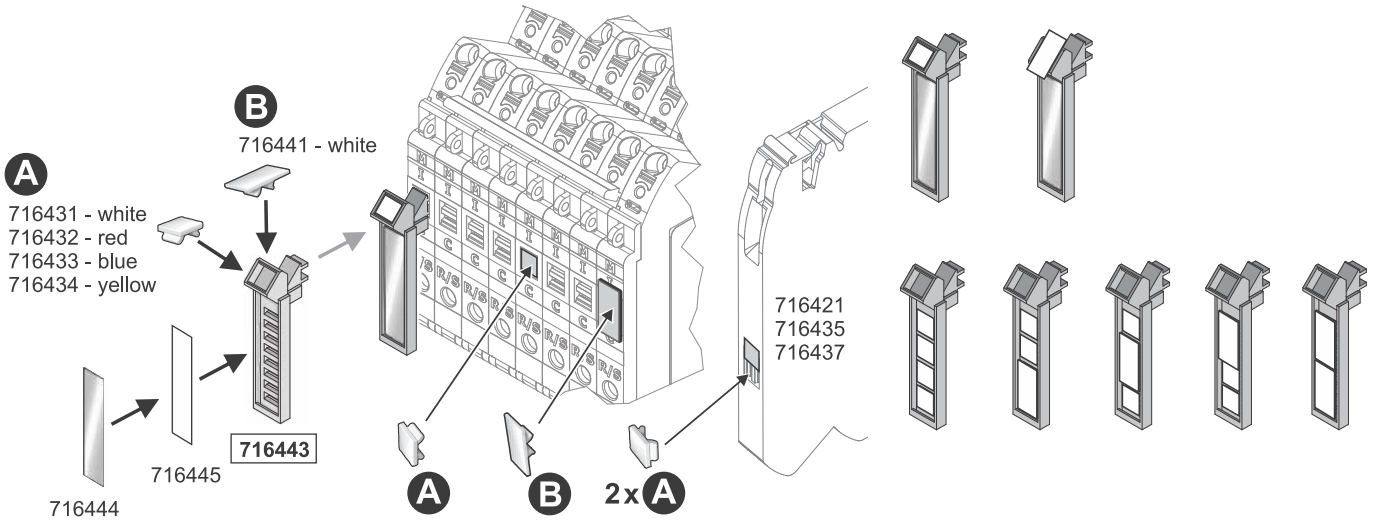

LED status

LED Status, Button, Rotary Switch

LED green	*ON*	*Function is OK**
LED green, flashing 1 Hz	*Overload*	*Load above 90 % of I nominal*
LED green, flashing 5 Hz	*Overload*	*Load above 100 % of I nominal*
LED red	*OFF*	*Module switched off or acknowledged**
LED red, flashing 1 Hz	*Overload*	*Output off due to overload/short circuit**
LED red, flashing 5 Hz	*Error*	*Wiring error – feedback (internal error)*
LED red, flashing shortly	*OFF*	*Output off via remote set/reset*
LED red/green, flashing 1 Hz	*ON*	*Target settings via rotary switch deviate from actual settings.* ***NOTICE: Switching off and on via pushbutton required.***
*Button ****	*ON/OFF*	*Nominal operation: ON/OFF* *Load monitoring tripped: 1st push: acknowledge* *2nd push: ON*
*Rotary Switch (I) – Switch Position***	*Rated current, see page 4.*	
*Rotary Switch (C) – Switch Position***	*Characteristic: 1: fast 2: middle* *3: slow-1 4: slow-2 5: slow-3*	

** If the operating voltage is switched off, the last status is saved (Default).*
button, not by Remote Set/Reset
nly be switched on

ructions

Signal output

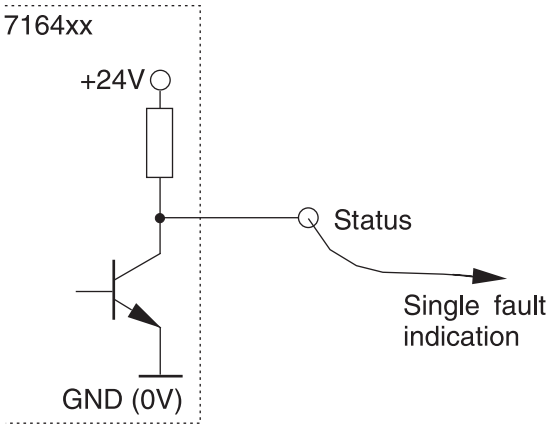

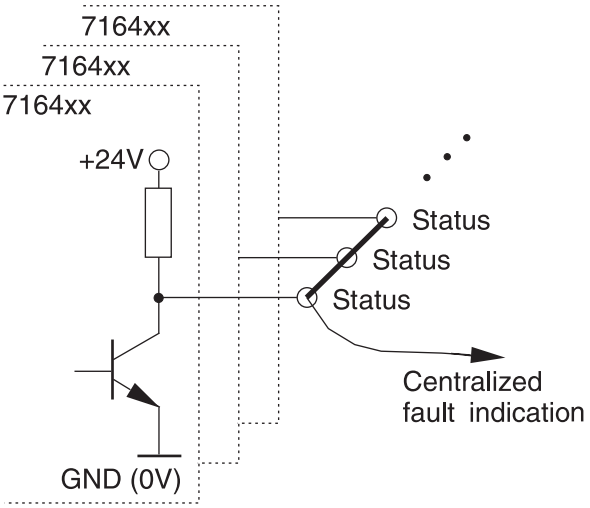

Mounting diagram

HINWEIS / NOTICE / AVIS

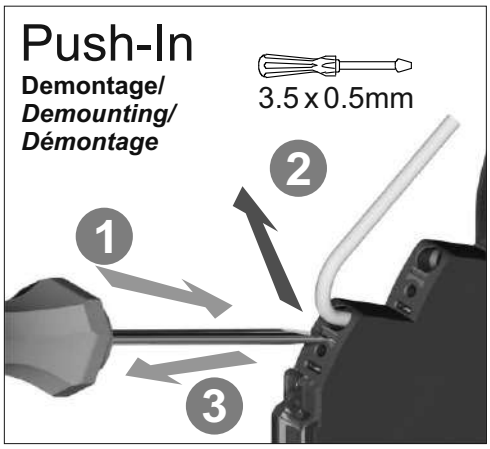

Technical data sheet

Load monitoring · LOCC-Box-Net

Electronic circuit breaker rated up to DC 10 A, with communication, parameterized
Single-channel design, adjustable current range: DC 1 A – 10 A
Adjustable characteristic: fast, medium, slow 1, -2, -3

Identification

Type	LOCC-Box-Net 7-6403
Part No.	716403

Product version

Hardware revision	2.0
Software version	2.6
Datasheet version	05

Input

Type of function	1-channel 1 pin switching
Rated voltage U_N	DC 12/24 V
Operation voltage range	DC 10–30 V
Rated current I_N	DC 10 A
Supply current	DC 40 A over Cu-rails 10 × 3 mm
Reverse voltage protection	Internal electronics
Connection type input	Screwless contact slide

Control input (Set / Reset)

Signal level	DC 12/24 V acc. to IEC 61131-2
OFF	Low level
ON	High level (automatic reset)

Output

Switching element	MOSFET

Output current	Max. DC 10 A
Voltage drop	Max. 215 mV (10 A)
Status display output	LED green: operating voltage present, no error LED red: error in load circuit
Switch-on capacity	10000 µF
Current range	1 A – 10 A (adjustable via switch in 1 A steps)
Characteristic	Fast (1), medium (2), slow 1 (3), slow 2 (4), slow 3 (5), can be configured (19) see 'characteristic curves'

Signal output

Signal level	DC 12/24 V: operating voltage on standby, no error, DC 0 V: error, output switched off, and manual "OFF" (parameterized)
Switching element	Transistor, collector with pull-up resistance

General

Dimensions (w × h × d)	8.1 mm × 107.4 mm × 116.0 mm
Housing material	PA 6.6 (UL 94 V-0, NFF I2, F2)
Color of the housing	Basalt grey
Mounting	DIN rail mountable TS35 (EN 60715)
Installation position	Any
MTBF	690000 h
Degree of protection	IP20 (only as complete system with supply terminal and end block)
Connection type	Push-In 0.25 mm² – 2.5 mm² AWG 24 – AWG 14
Weight/unit	0.07 kg
PU (units)	1

General ambient conditions

Operation temperature range	-25 °C . . . +50 °C
Storage temperature range	-40 °C . . . +85 °C
Relative air humidity	10 % – 95 %, without condensation
Vibration resistance	4 g acc. to EN 60068-2-6
Shock resistance	15 g acc. EN 60068-2-27

Certifications/Standards

Conformity	CE UKCA
Certifications	cULus (E135145) URus (E490188)

Dimensions

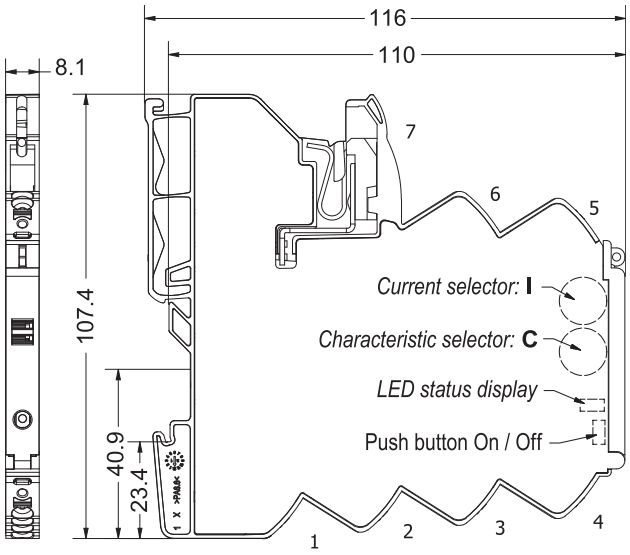

PIN assignment

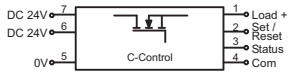

1: + Output
2: Control input (Set/Reset)
3: Status output
4: 1 Wire bus (Communication)
5: 0V
6: + Supply (alternative)
7: + Supply

1: Characteristic fast

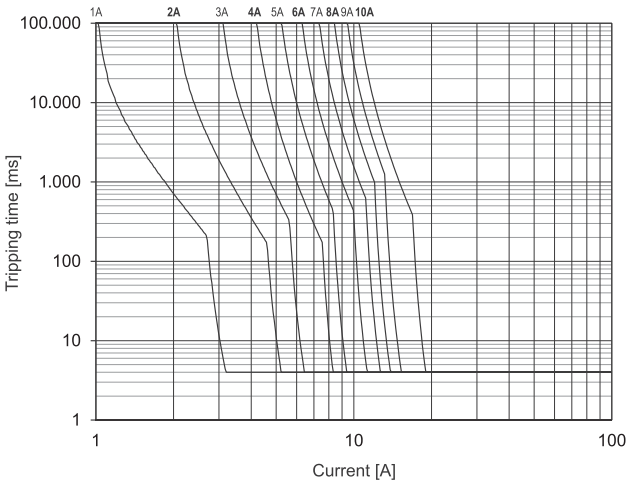

2: Characteristic medium

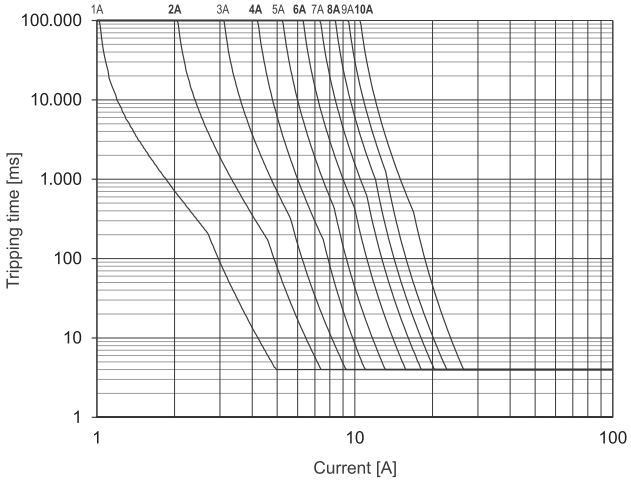

3: Characteristic slow-1

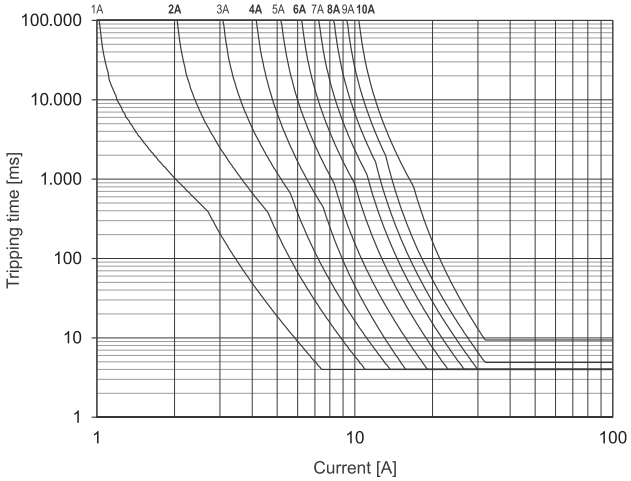

4: Characteristic slow-2

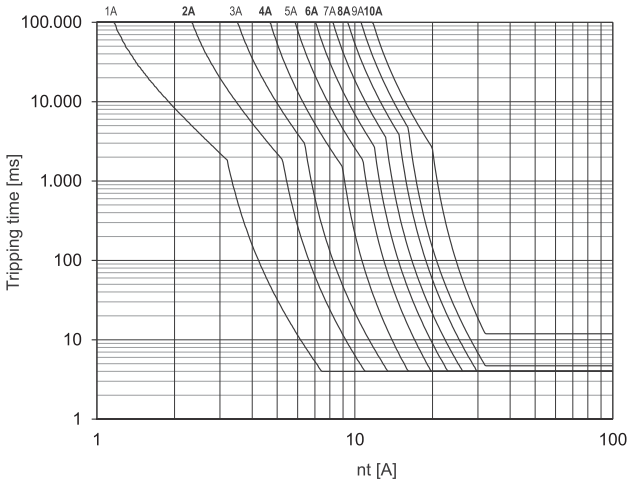

5: Characteristic slow-3

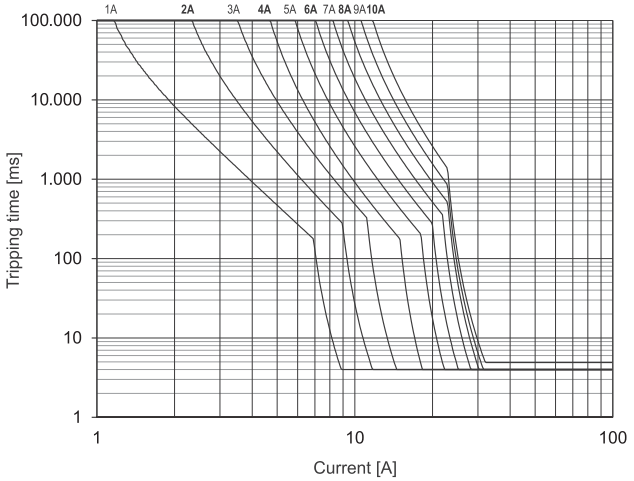

Use

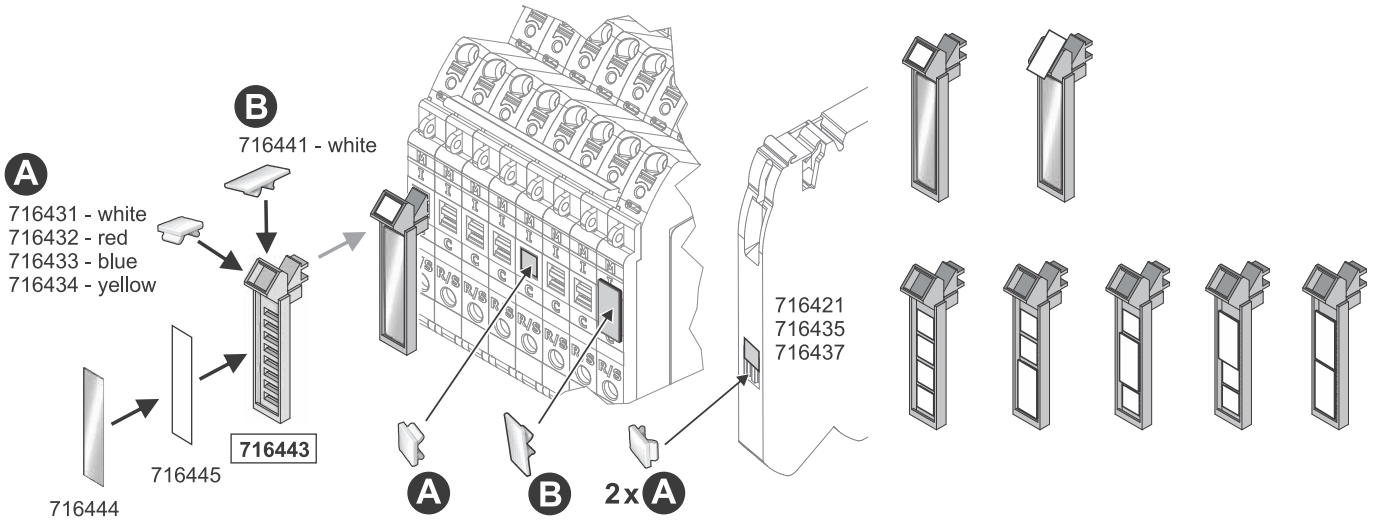

LED status

LED Status, Button, Rotary Switch

LED green	*ON*	*Function is OK**
LED green, flashing 1 Hz	*Overload*	*Load above 90 % of I nominal*
LED green, flashing 5 Hz	*Overload*	*Load above 100 % of I nominal*
LED red	*OFF*	*Module switched off or acknowledged**
LED red, flashing 1 Hz	*Overload*	*Output off due to overload/short circuit**
LED red, flashing 5 Hz	*Error*	*Wiring error – feedback (internal error)*
LED red, flashing shortly	*OFF*	*Output off via remote set/reset*
LED red/green, flashing 1 Hz	*ON*	*Target settings via rotary switch deviate from actual settings.* ***NOTICE: Switching off and on via pushbutton required.***
*Button ****	*ON/OFF*	*Nominal operation: ON/OFF* *Load monitoring tripped: 1st push: acknowledge* *2nd push: ON*
*Rotary Switch (I) – Switch Position***	*Rated current, see page 4.*	
*Rotary Switch (C) – Switch Position***	*Characteristic: 1: fast 2: middle* *3: slow-1 4: slow-2 5: slow-3*	

** If the operating voltage is switched off, the last status is saved (Default).*
button, not by Remote Set/Reset
nly be switched on

ructions

Signal output

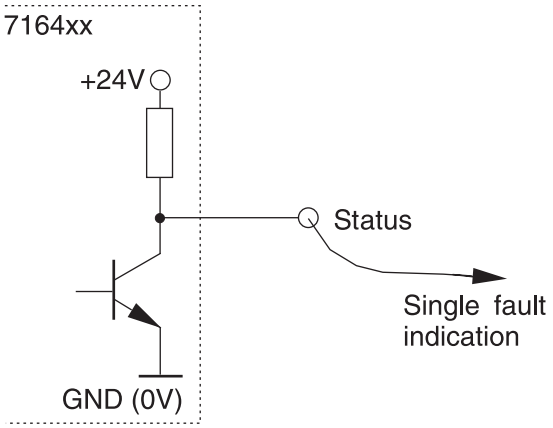

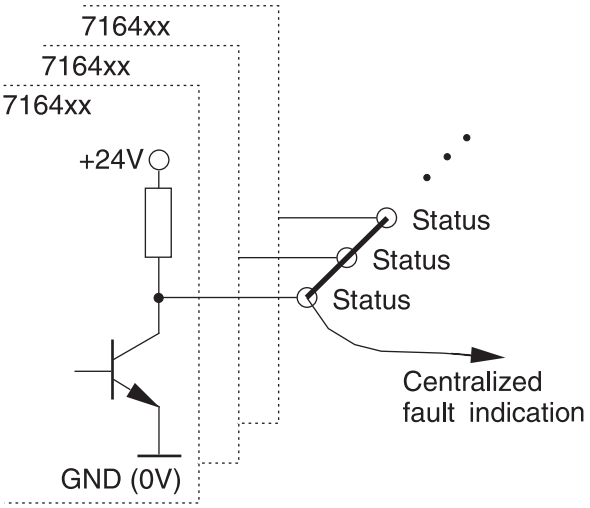

Mounting diagram

HINWEIS / NOTICE / AVIS

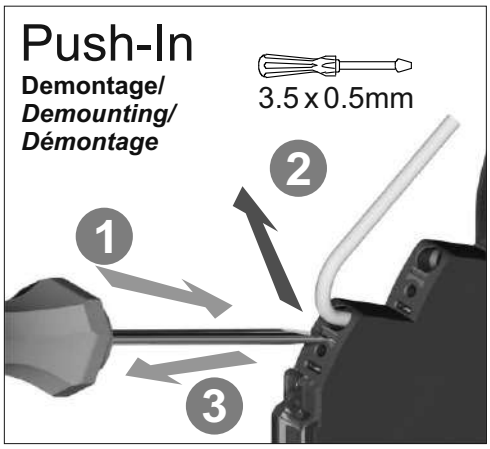

Technical data sheet

Load monitoring · LOCC-Box-Net

Electronic circuit breaker rated up to DC 10 A, with communication, parameterized
Single-channel design, adjustable current range: DC 1 A – 10 A
Adjustable characteristics, fast, medium, slow 1, -2, -3

Identification

Type	LOCC-Box-Net 7-6404
Part No.	716404

Product version

Hardware revision	2.0
Software version	2.6
Datasheet version	05

Input

Type of function	1-channel 1 pin switching
Rated voltage U_N	DC 12/24 V
Operation voltage range	DC 10–30 V
Rated current I_N	DC 10 A
Supply current	DC 40 A over Cu-rails 10 × 3 mm
Reverse voltage protection	Internal electronics
Connection type input	Screwless contact slide

Control input (Set / Reset)

Signal level	DC 12/24 V acc. to IEC 61131-2
OFF	Low level
ON	High level (manual reset)

Output

Switching element	MOSFET

Output current	Max. DC 10 A
Voltage drop	Max. 215 mV (10 A)
Status display output	LED green: operating voltage present, no error LED red: error in load circuit
Switch-on capacity	10000 µF
Current range	1 A – 10 A (adjustable via switch in 1 A steps)
Characteristic	Fast (1), medium (2), slow 1 (3), slow 2 (4), slow 3 (5), can be configured (19) see 'characteristic curves'

Signal output

Signal level	DC 12/24 V: operating voltage on standby, no error, DC 0 V: error, output switched off, and manual "OFF" (parameterized)
Switching element	Transistor, collector with pull-up resistance

General

Dimensions (w × h × d)	8.1 mm × 107.4 mm × 116.0 mm
Housing material	PA 6.6 (UL 94 V-0, NFF I2, F2)
Color of the housing	Basalt grey
Mounting	DIN rail mountable TS35 (EN 60715)
Installation position	Any
MTBF	690000 h
Degree of protection	IP20 (only as complete system with supply terminal and end block)
Connection type	Push-In 0.25 mm² – 2.5 mm² AWG 24 – AWG 14
Weight/unit	0.07 kg
PU (units)	1

General ambient conditions

Operation temperature range	-25 °C . . . +50 °C
Storage temperature range	-40 °C . . . +85 °C
Relative air humidity	10 % – 95 %, without condensation
Vibration resistance	4 g acc. to EN 60068-2-6
Shock resistance	15 g acc. EN 60068-2-27

Certifications/Standards

Conformity	CE UKCA
Certifications	cULus (E135145) URus (E490188)

Technical data sheet

Load monitoring · LOCC-Box-Net

Notes and Comments

Comments	The triggered output can only be acknowledged via the device switch.

Dimensions

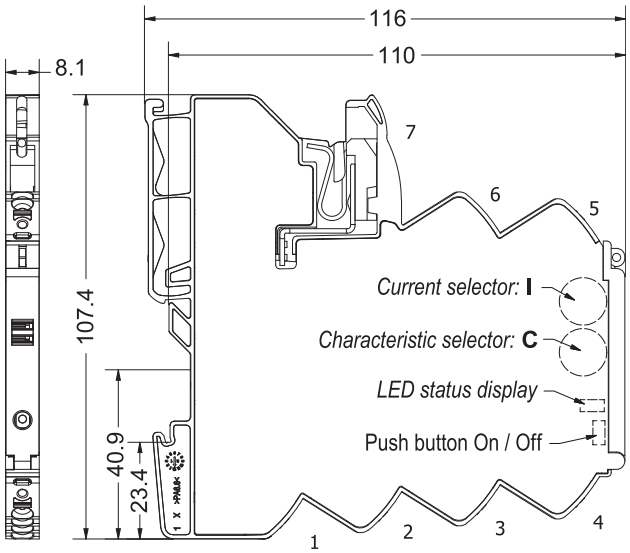

PIN assignment

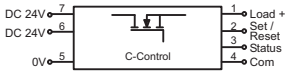

1: + Output
2: Control input (Set/Reset)
3: Status output
4: 1 Wire bus (Communication)
5: 0V
6: + Supply (alternative)
7: + Supply

1: Characteristic fast

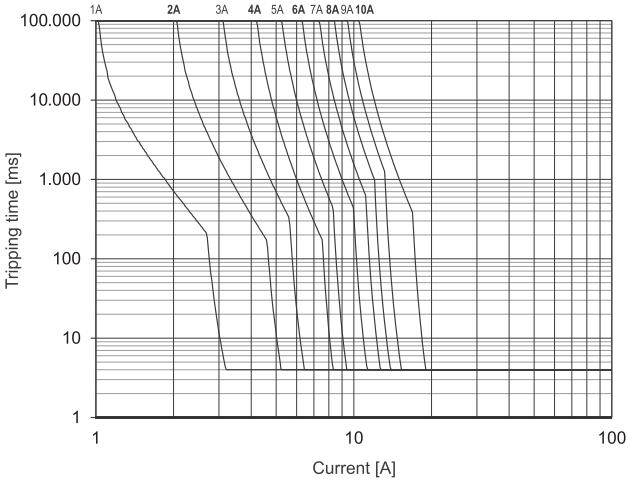

2: Characteristic medium

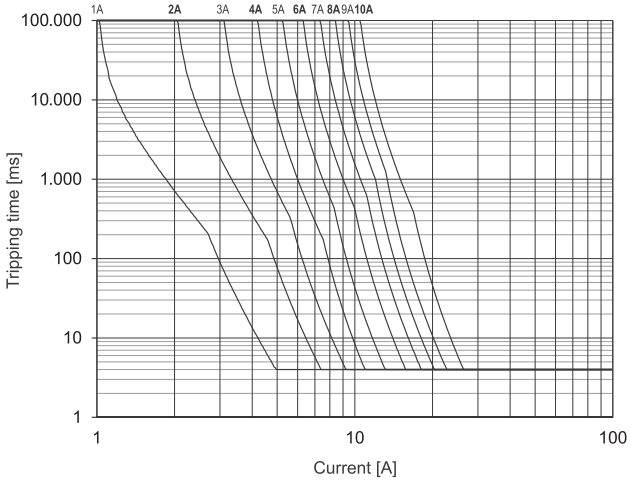

3: Characteristic slow-1

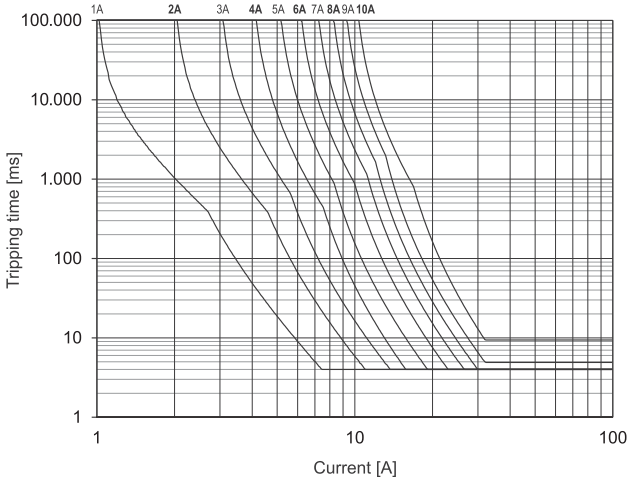

4: Characteristic slow-2

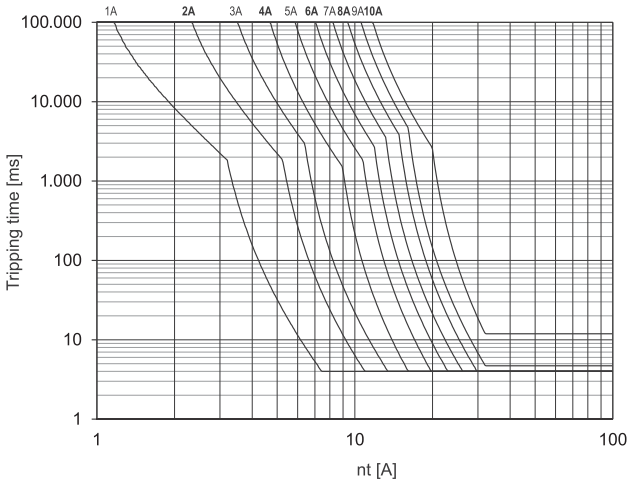

5: Characteristic slow-3

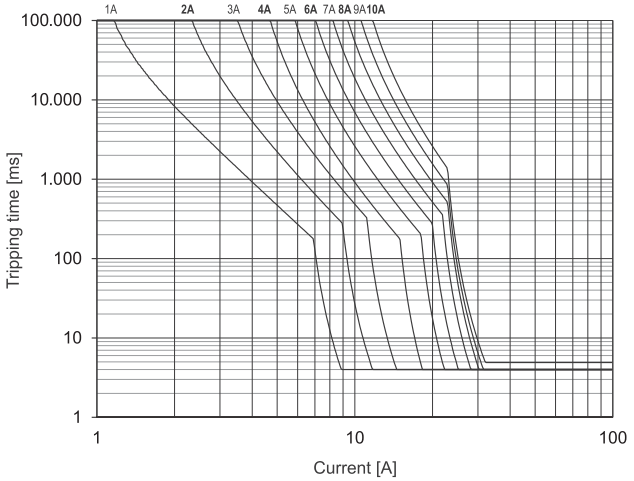

Use

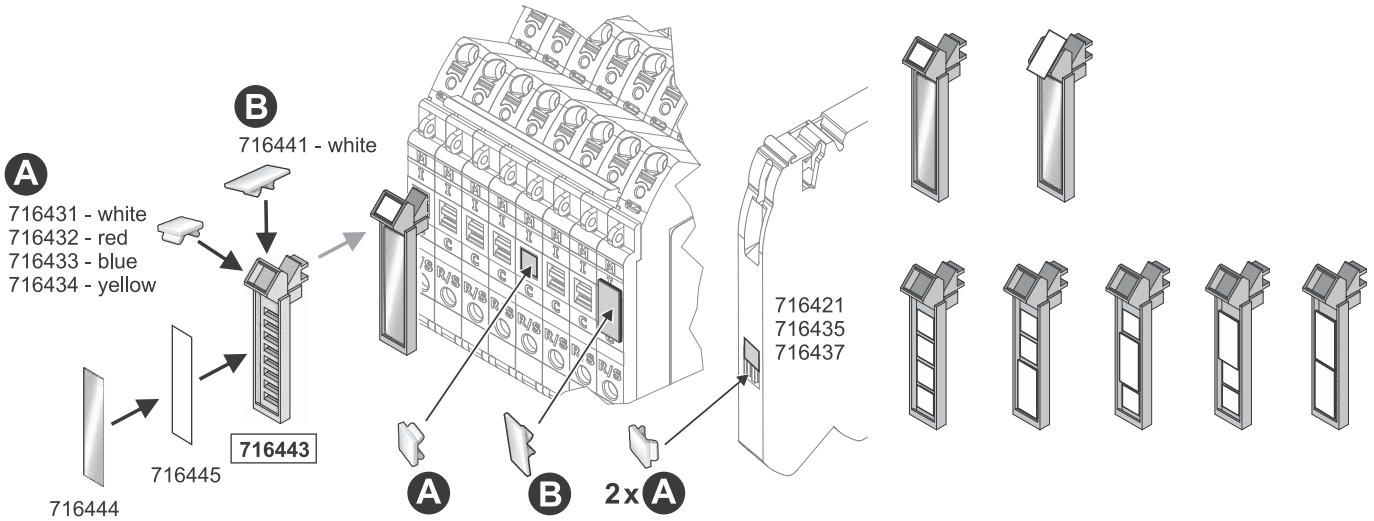

LED status

LED Status, Button, Rotary Switch

LED green	*ON*	*Function is OK**
LED green, flashing 1 Hz	*Overload*	*Load above 90 % of I nominal*
LED green, flashing 5 Hz	*Overload*	*Load above 100 % of I nominal*
LED red	*OFF*	*Module switched off or acknowledged**
LED red, flashing 1 Hz	*Overload*	*Output off due to overload/short circuit**
LED red, flashing 5 Hz	*Error*	*Wiring error – feedback (internal error)*
LED red, flashing shortly	*OFF*	*Output off via remote set/reset*
LED red/green, flashing 1 Hz	*ON*	*Target settings via rotary switch deviate from actual settings.* ***NOTICE: Switching off and on via pushbutton required.***
*Button ****	*ON/OFF*	*Nominal operation: ON/OFF* *Load monitoring tripped: 1st push: acknowledge* *2nd push: ON*
*Rotary Switch (I) – Switch Position***	*Rated current, see page 4.*	
*Rotary Switch (C) – Switch Position***	*Characteristic: 1: fast 2: middle* *3: slow-1 4: slow-2 5: slow-3*	

** If the operating voltage is switched off, the last status is saved (Default).*
button, not by Remote Set/Reset
nly be switched on

ructions

Signal output

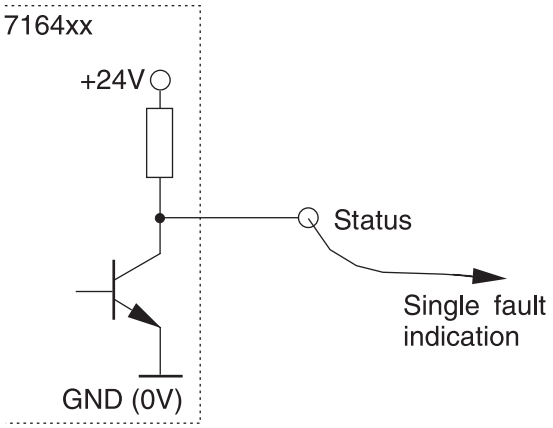

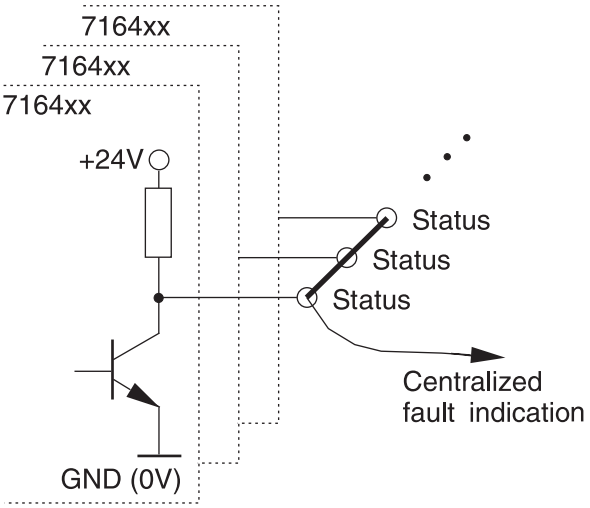

Mounting diagram

HINWEIS / NOTICE / AVIS

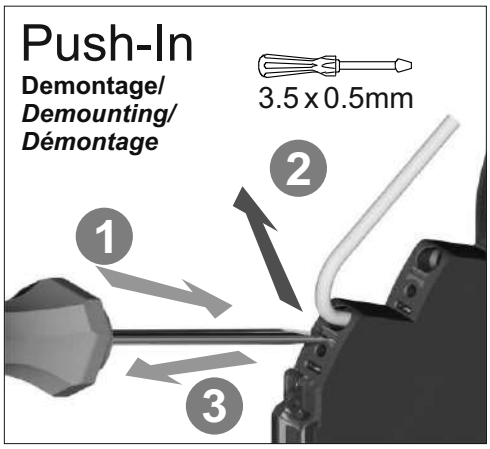

Technical data sheet

Load monitoring · LOCC-Box-FB48

Electronic circuit breaker rated up to DC 48 V to 6 A
Single-channel design, adjustable current range: DC 1 A – 6 A
Adjustable characteristics, fast, medium, slow 1, -2, -3

Identification

Type	LOCC-Box-FB48 7-6406
Part No.	716406

Product version

Hardware revision	2.3
Software version	2.3
Datasheet version	03

Input

Type of function	1-channel 1 pin switching
Rated voltage U_N	DC 48 V
Operation voltage range	DC 39–58 V
Rated current I_N	DC 6 A
Supply current	DC 40 A over Cu-rails 10 × 3 mm
Reverse voltage protection	Internal electronics
Connection type input	Screwless contact slide

Control input (Set / Reset)

Signal level	DC 48 V acc. to EN 61131
OFF	Pulse with falling edge >100 ms, <800 ms
ON	Pulse with falling edge > 1 s

Output

Switching element	MOSFET

Output current	Max. DC 6 A
Voltage drop	Max. 310 mV (6 A)
Status display output	LED green: operating voltage present, no error LED red: error in load circuit
Switch-on capacity	1000 µF
Current range	1 A – 6 A (adjustable via switch in 1 A steps)
Characteristic	Fast (1), medium (2), slow 1 (3), slow 2 (4), slow 3 (5) see ’characteristic curves’
Current limitation	13.75 A

Signal output

Signal level	DC 48 V: operating voltage on standby, no error, DC 0 V: error, output switched off and manual "OFF"
Switching element	Transistor, collector with pull-up resistance

General

Dimensions (w × h × d)	8.1 mm × 107.4 mm × 116.0 mm
Housing material	PA 6.6 (UL 94 V-0, NFF I2, F2)
Color of the housing	Basalt grey
Mounting	DIN rail mountable TS35 (EN 60715)
Installation position	Any
MTBF	690000 h
Degree of protection	IP20 (only as complete system with power terminal and end block)
Connection type	Push-In 0.25 mm² – 2.5 mm² AWG 24 – AWG 14
Weight/unit	0.07 kg
PU (units)	1

General ambient conditions

Operation temperature range	-25 °C … +50 °C
Storage temperature range	-40 °C … +85 °C
Relative air humidity	10 % – 95 %, without condensation
Vibration resistance	4 g acc. to EN 60068-2-6
Shock resistance	15 g acc. EN 60068-2-27

Certifications/Standards

Conformity	CE UKCA
Certifications	cULus (E135145)

Dimensions

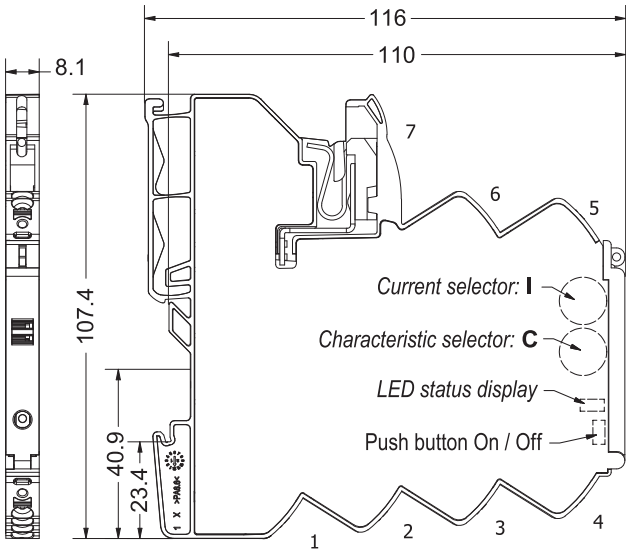

PIN assignment

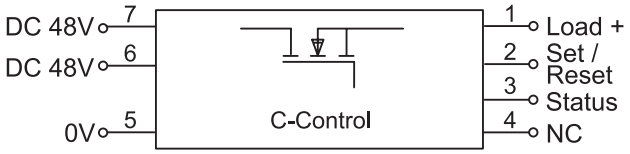

1: + Output
2: Control input (Set/Reset)
3: Status output
4: not used
5: 0V
6: + Supply (alternative)
7: + Supply

1: Characteristic fast

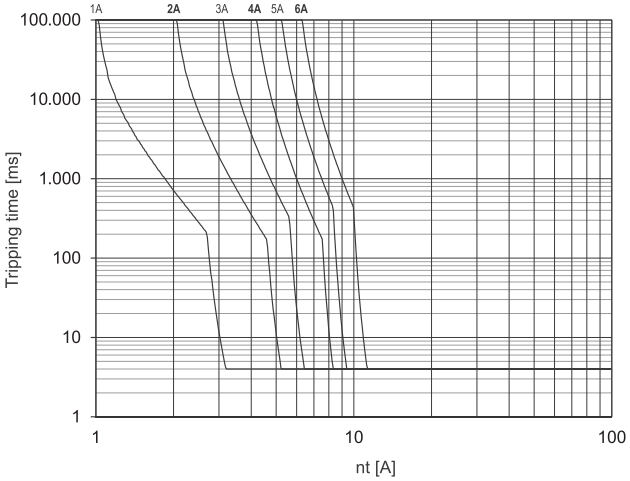

2: Characteristic medium

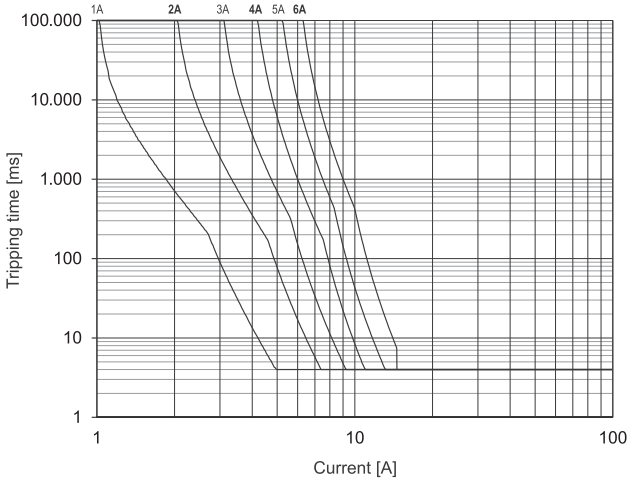

3: Characteristic slow-1

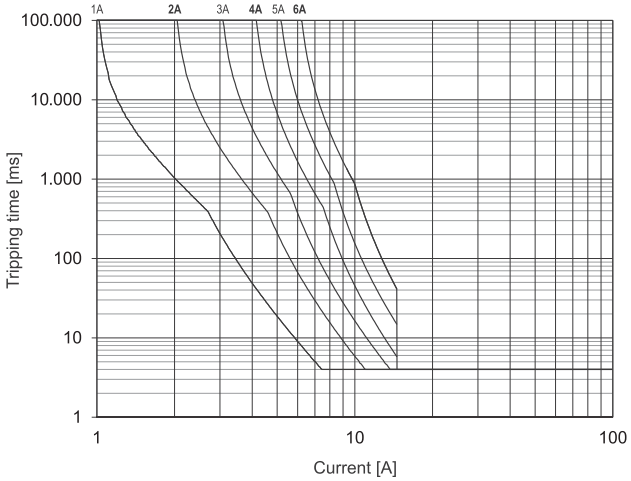

4: Characteristic slow-2

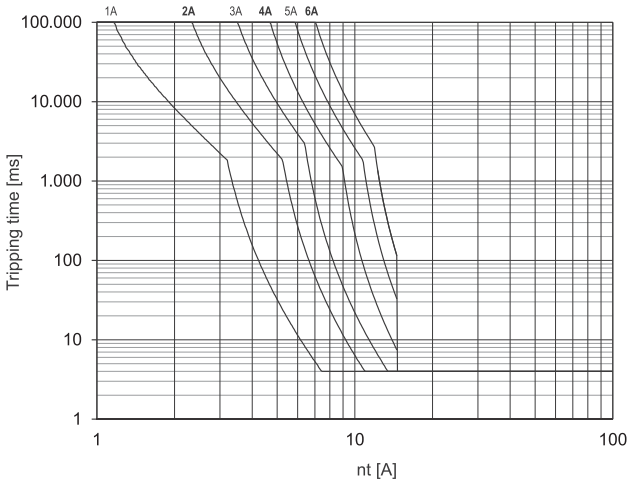

5: Characteristic slow-3

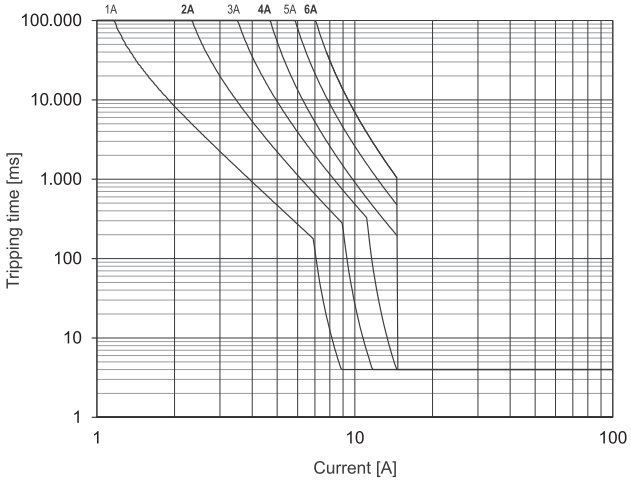

Use

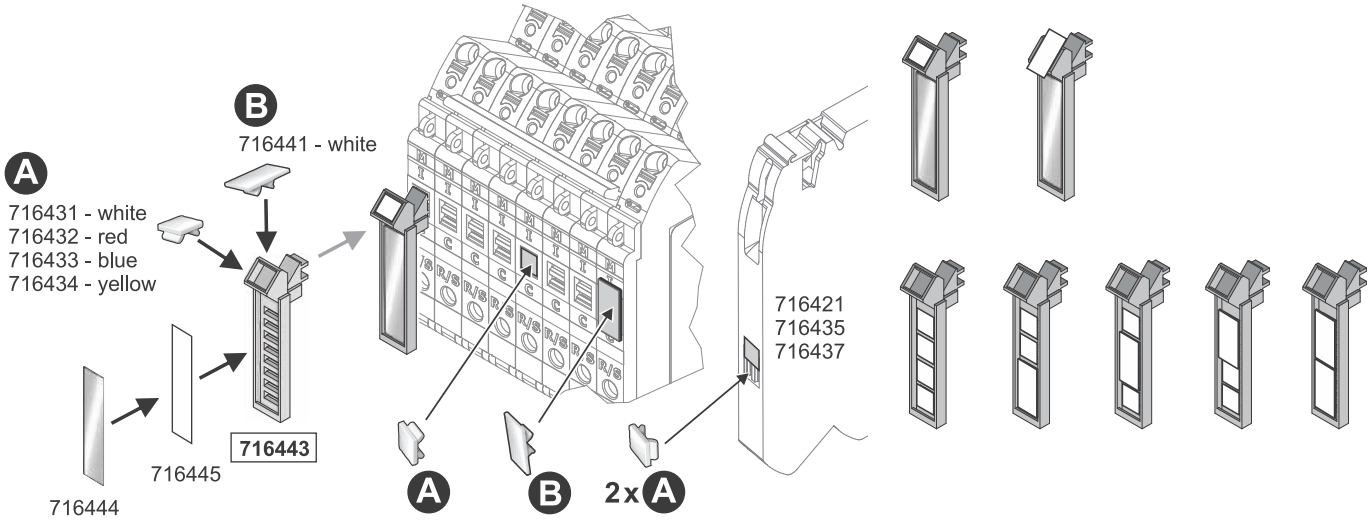

LED status

DE LED Status, Taster, Drehschalter

LED grün	EIN	Funktion in Ordnung*
LED grün, blinkend 1 Hz	Überlast	Belastung über 90 % von I nenn
LED grün, blinkend 5 Hz	Überlast	Belastung über 100 % von I nenn
LED rot	AUS	Modul wurde ausgeschaltet oder quittiert*
LED rot, blinkend 1 Hz	Überlast	Ausgang ist abgeschaltet durch Überlast/Kurzschluss*
LED rot, blinkend 5 Hz	Fehler	Verdrahtungsfehler – Rückspeisung (interner Fehler)
LED rot, aufblitzend	AUS	Ausgang ist abgeschaltet durch Fern Set/Reset
Taster ***	EIN/AUS	Nennbetrieb: EIN/AUS Lastüberwachung hat ausgelöst: 1. tasten: quittieren 2. tasten: EIN
Drehschalter (I) – Schalterstellung**		Nennstrom: Siehe Seite 4
Drehschalter (C) – Schalterstellung**		Charaktertistik: 1: flink 2: mittel 3: träge-1 4: träge-2 5: träge-3

* Bei einer Unterbrechung der Betriebsspannung, wird der letzte Zustand gespeichert (Default)
** Übernahme der Einstellung nach erneutem Einschalten über den Taster, nicht durch Fern Set/Reset
*** Masterfunktion – Ausschalten über Taster, nur über Taster wieder einschaltbar

EN *LED Status, Button, Rotary Switch*

LED green	*ON*	*Function is OK**
LED green, flashing 1 Hz	*Overload*	*Load above 90 % of I nominal*
LED green, flashing 5 Hz	*Overload*	*Load above 100 % of I nominal*
LED red	*OFF*	*Module switched off or acknowledged**
LED red, flashing 1 Hz	*Overload*	*Output off due to overload/short circuit**
LED red, flashing 5 Hz	*Error*	*Wiring error – feedback (internal error)*
LED red, flashing shortly	*OFF*	*Output off via remote set/reset*
*Button ****	*ON/OFF*	*Nominal operation: ON/OFF* *Load monitoring tripped: 1st push: acknowledge* *2nd push: ON*
*Rotary Switch (I) – Switch Position***		*Rated current, see page 4.*
*Rotary Switch (C) – Switch Position***		*Characteristic: 1: fast 2: middle* *3: slow-1 4: slow-2 5: slow-3*

** If the operating voltage is switched off, the last status is saved (Default).*
*** Accept the setting - after switching on again via the button, not by Remote Set/Reset*
**** Master function - switch off via push button, can only be switched on again via push button*

FR *LED état, Bouton, Commutateur rotatif*

LED verte	*Marche*	*Functionnement OK**
LED verte, clignote 1 Hz	*Sur charge*	*Le courant demandé est supérieur à 90% du réglage*
LED verte, clignote 5 Hz	*Sur charge*	*Le courant demandé est supérieur à 100% du réglage*
LED rouge	*Arrêt*	*Le module désactivé ou acquitté**
LED rouge, clignote 1 Hz	*Sur charge*	*La sortie est coupée par sur charge/courts-circuits**
LED rouge, clignote 5 Hz	*Erreur*	*Erreur câblage (alimentation de retour), erreur interne*
LED rouge, clignote courts	*Arrêt*	*Sortie désactivée par remote set/reset*
*Bouton ****	*Marche/Arrêt*	*Opération normale: marche/arrêt* *La surveillance de la charge a déclenché: 1ère pression: validation du défaut* *2ème pression: remise en marche*
*Commutateur rotatif (I) – Position***		*Courant nominal, page 4*
*Commutateur rotatif (C) – Position***		*Courbe: 1: rapide 2: moyenne 3: lente-1* *4: lente-2 5: lente-3*

** Interruption de la tension de fonctionnement, le dernir état est enregistré (par défaut)*
*** La modification du courant ou des courbes sont actives après validation par le bouton poussoir (off/on). Cette fonction n'est pas faisable par l'entrée déportée*
**** La fonction I/O dèportèe est achive que si le bouton poussoir est en position ON.*

Signal output

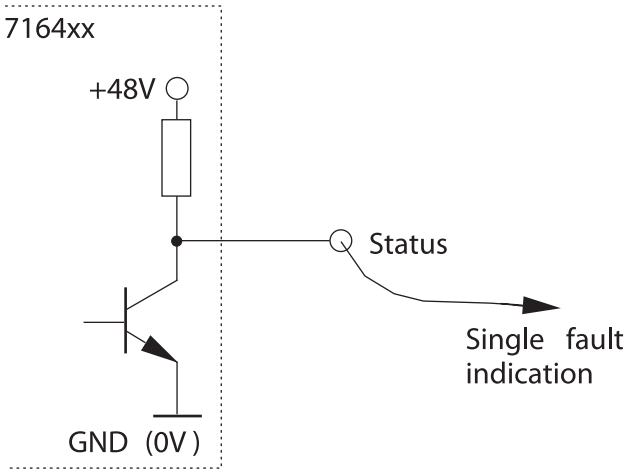

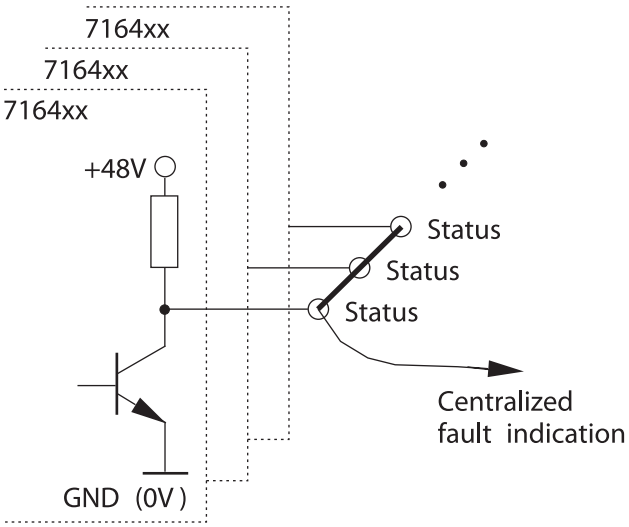

Mounting diagram

HINWEIS / NOTICE / AVIS

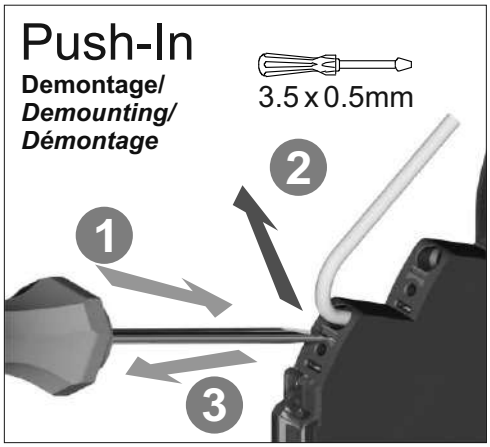

Technical data sheet

Load monitoring · LOCC-Box-EC

Electronic circuit breaker rated up to DC 10 A
Single channel version, fixed current range: DC 10 A
Fixed characteristic: slow 1

Identification

Type	LOCC-BOX-EC I10-C3
Part No.	716407.0300

Product version

Hardware revision	2.0
Software version	**2.6**
Datasheet version	00

Input

Type of function	1-channel 1 pin switching
Rated voltage U_N	DC 12/24 V
Operation voltage range	DC 10–30 V
Rated current I_N	DC 10 A
Supply current	DC 40 A over Cu-rails 10 × 3 mm
Reverse voltage protection	Internal electronics
Connection type input	Screwless contact slide

Control input (Set / Reset)

Signal level	DC 12/24 V acc. to IEC 61131-2

Output

Switching element	MOSFET
Output current	Max. DC 10 A
Voltage drop	Max. 215 mV (10 A)

Status display output	LED green: operating voltage present, no error LED red: error in load circuit
Switch-on capacity	10000 µF
Current range	10 A
Characteristic	Slow 1 (3)

Signal output

Signal level	DC 12/24 V: operating voltage on standby, no error, DC 0 V: error, output switched off and manual "OFF"
Switching element	Transistor, collector with pull-up resistance

General

Dimensions (w × h × d)	8.1 mm × 107.4 mm × 116.0 mm
Housing material	PA 6.6 (UL 94 V-0, NFF I2, F2)
Mounting	DIN rail mountable TS35 (EN 60715)
Installation position	Any
MTBF	690000 h
Degree of protection	IP20 (only as complete system with supply terminal and end block)
Connection type	Push-In 0.25 mm² – 2.5 mm² AWG 24 – AWG 14
Weight/unit	0.07 kg
PU (units)	1

General ambient conditions

Operation temperature range	-25 °C … +50 °C
Storage temperature range	-40 °C … +85 °C
Relative air humidity	10 % – 95 %, without condensation
Vibration resistance	4 g acc. to EN 60068-2-6
Shock resistance	15 g acc. EN 60068-2-27

Certifications/Standards

Conformity	CE UKCA
Certifications	cULus (E135145) URus (E490188)
Standards	EN 61000-2 EN 61000-3 UL 60947-5-1 UL 2367

Dimensions

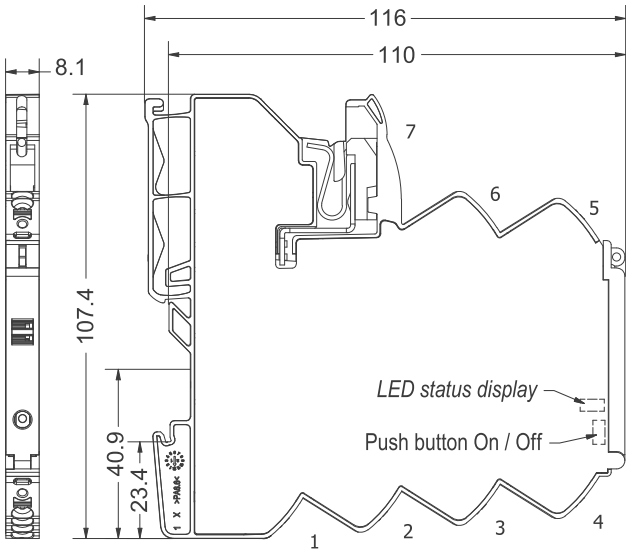

PIN assignment

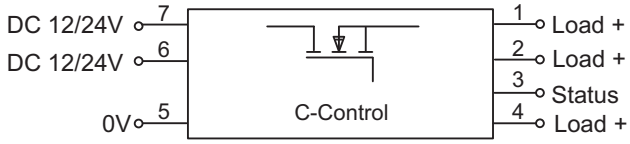

1: + Output
2: + Output
3: Status output
4: + Output
5: 0V
6: + Supply (alternative)
7: + Supply

3: Characteristic slow-1

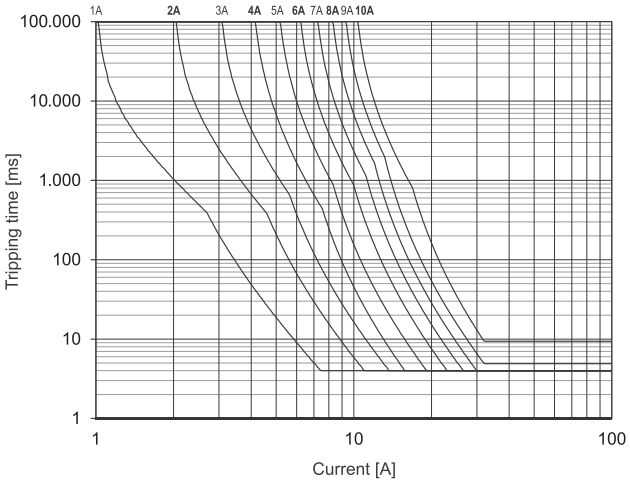

Use

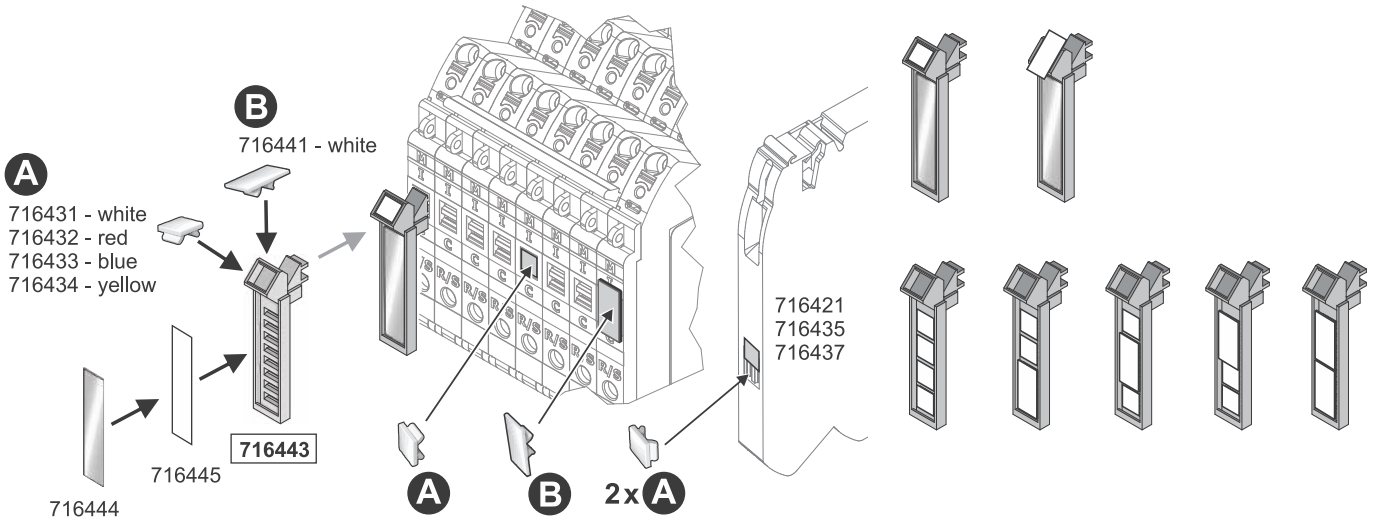

LED status

LED Status, Button, Rotary Switch

LED green	*ON*	*Function is OK**
LED green, flashing 1 Hz	*Overload*	*Load above 90 % of I nominal*
LED green, flashing 5 Hz	*Overload*	*Load above 100 % of I nominal*
LED red	*OFF*	*Module switched off or acknowledged**
LED red, flashing 1 Hz	*Overload*	*Output off due to overload/short circuit**
LED red, flashing 5 Hz	*Error*	*Wiring error – feedback (internal error)*
LED red, flashing shortly	*OFF*	*Output off via remote set/reset*
LED red/green, flashing 1 Hz	*ON*	*Target settings via rotary switch deviate from actual settings.* ***NOTICE: Switching off and on via pushbutton required.***
*Button ***	*ON/OFF*	*Nominal operation: ON/OFF* *Load monitoring tripped: 1st push: acknowledge* *2nd push: ON*

** If the operating voltage is switched off, the last status is saved (Default).*

*** Master function - switch off via push button, can only be switched on again via push button*

For further information see also the operating instructions

Signal output

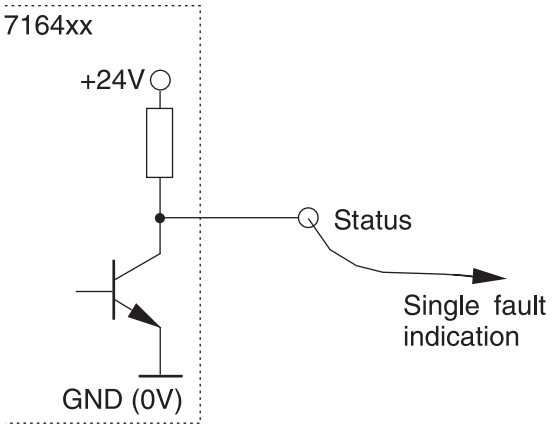

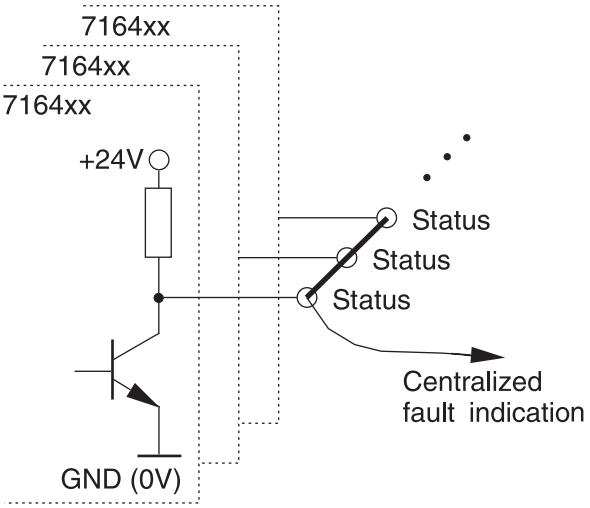

Mounting diagram

HINWEIS / NOTICE / AVIS

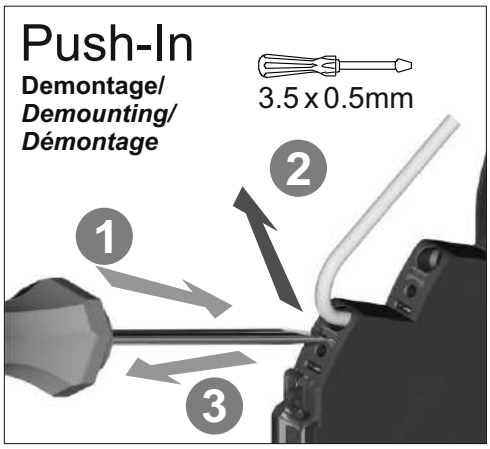

Technical data sheet

Load monitoring · LOCC-Box-EC

Electronic circuit breaker rated up to DC 10 A
Single channel version, fixed current range: DC 1 A
Fixed characteristic: slow 1

Identification

Type	LOCC-BOX-EC I1-C3
Part No.	716407.1300

Product version

Hardware revision	2.0
Software version	**2.6**
Datasheet version	00

Input

Type of function	1-channel 1 pin switching
Rated voltage U_N	DC 12/24 V
Operation voltage range	DC 10–30 V
Rated current I_N	DC 10 A
Supply current	DC 40 A over Cu-rails 10 × 3 mm
Reverse voltage protection	Internal electronics
Connection type input	Screwless contact slide

Control input (Set / Reset)

Signal level	DC 12/24 V acc. to IEC 61131-2

Output

Switching element	MOSFET
Output current	Max. DC 10 A
Voltage drop	Max. 215 mV (10 A)

Status display output	LED green: operating voltage present, no error LED red: error in load circuit
Switch-on capacity	10000 µF
Current range	1 A
Characteristic	Slow 1 (3)

Signal output

Signal level	DC 12/24 V: operating voltage on standby, no error, DC 0 V: error, output switched off and manual "OFF"
Switching element	Transistor, collector with pull-up resistance

General

Dimensions (w × h × d)	8.1 mm × 107.4 mm × 116.0 mm
Housing material	PA 6.6 (UL 94 V-0, NFF I2, F2)
Mounting	DIN rail mountable TS35 (EN 60715)
Installation position	Any
MTBF	690000 h
Degree of protection	IP20 (only as complete system with supply terminal and end block)
Connection type	Push-In 0.25 mm² – 2.5 mm² AWG 24 – AWG 14
Weight/unit	0.07 kg
PU (units)	1

General ambient conditions

Operation temperature range	-25 °C … +50 °C
Storage temperature range	-40 °C … +85 °C
Relative air humidity	10 % – 95 %, without condensation
Vibration resistance	4 g acc. to EN 60068-2-6
Shock resistance	15 g acc. EN 60068-2-27

Certifications/Standards

Conformity	CE UKCA
Certifications	cULus (E135145) URus (E490188)
Standards	EN 61000-2 EN 61000-3 UL 60947-5-1 UL 2367

Dimensions

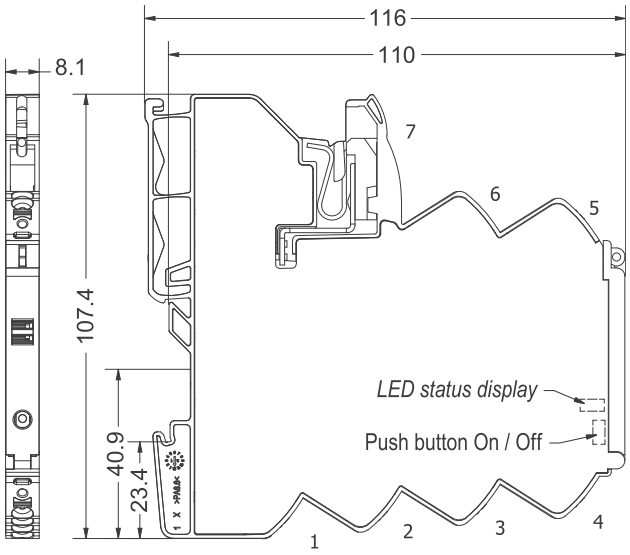

PIN assignment

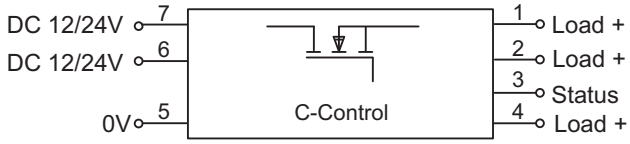

1: + Output
2: + Output
3: Status output
4: + Output
5: 0V
6: + Supply (alternative)
7: + Supply

3: Characteristic slow-1

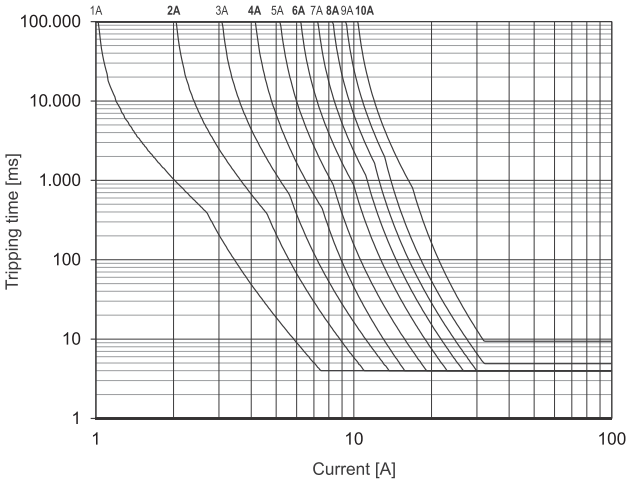

Use

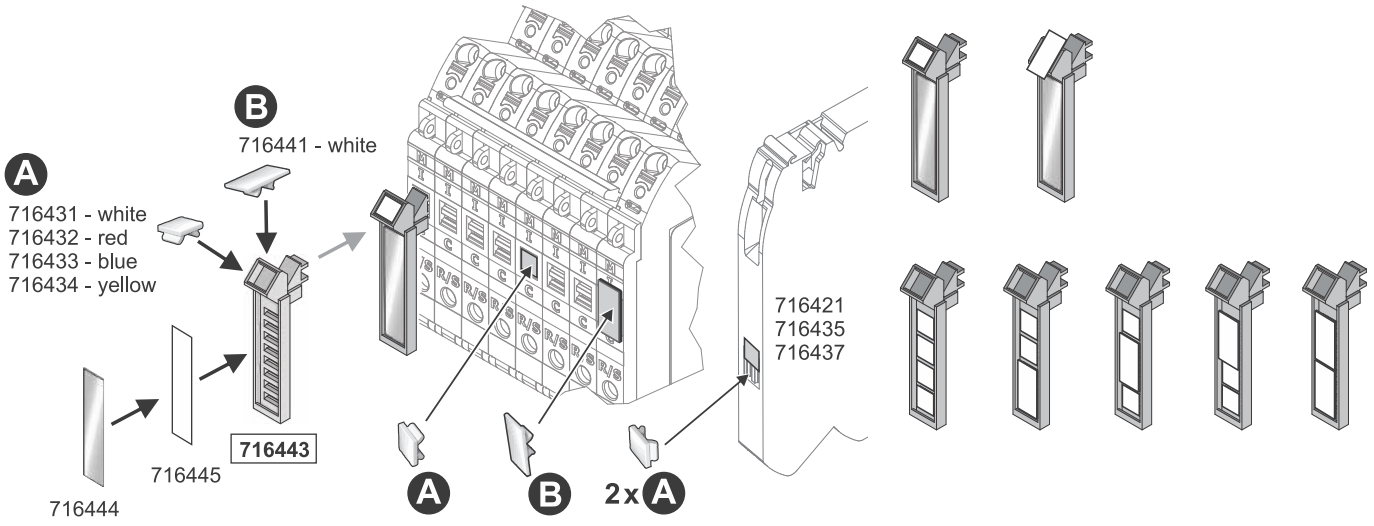

LED status

LED Status, Button, Rotary Switch

LED green	*ON*	*Function is OK**
LED green, flashing 1 Hz	*Overload*	*Load above 90 % of I nominal*
LED green, flashing 5 Hz	*Overload*	*Load above 100 % of I nominal*
LED red	*OFF*	*Module switched off or acknowledged**
LED red, flashing 1 Hz	*Overload*	*Output off due to overload/short circuit**
LED red, flashing 5 Hz	*Error*	*Wiring error – feedback (internal error)*
LED red, flashing shortly	*OFF*	*Output off via remote set/reset*
LED red/green, flashing 1 Hz	*ON*	*Target settings via rotary switch deviate from actual settings.* ***NOTICE: Switching off and on via pushbutton required.***
*Button ***	*ON/OFF*	*Nominal operation: ON/OFF* *Load monitoring tripped: 1st push: acknowledge* *2nd push: ON*

** If the operating voltage is switched off, the last status is saved (Default).*

*** Master function - switch off via push button, can only be switched on again via push button*

For further information see also the operating instructions

Signal output

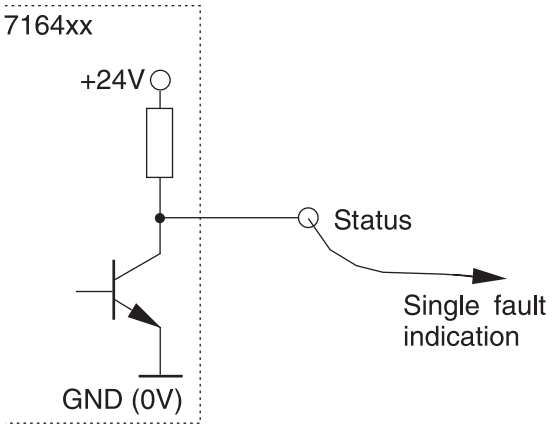

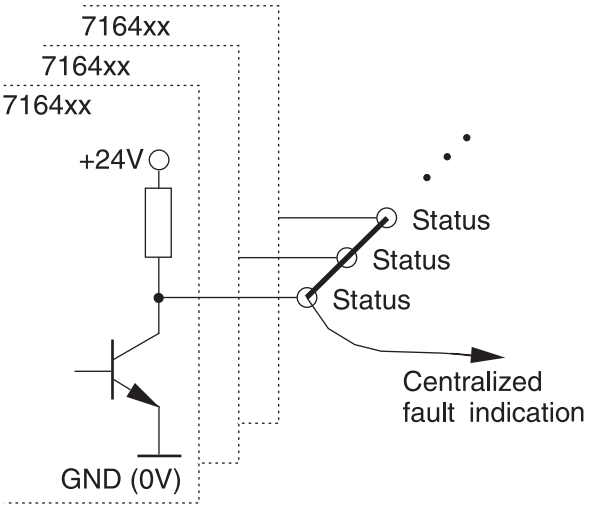

Mounting diagram

HINWEIS / NOTICE / AVIS

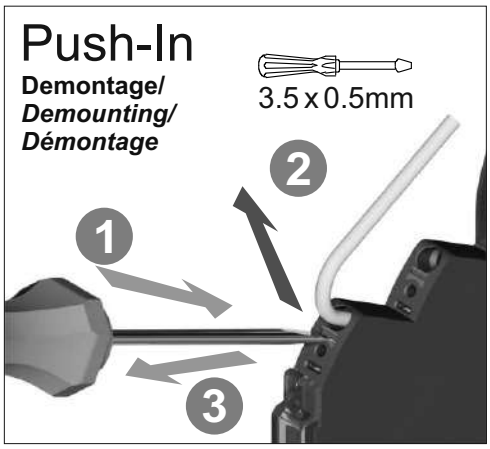

Technical data sheet

Load monitoring · LOCC-Box-EC

Electronic circuit breaker rated up to DC 10 A
Single channel version, fixed current range: DC 2 A
Fixed characteristic: slow 1

Identification

Type	LOCC-BOX-EC I2-C3
Part No.	716407.2300

Product version

Hardware revision	2.0
Software version	**2.6**
Datasheet version	00

Input

Type of function	1-channel 1 pin switching
Rated voltage U_N	DC 12/24 V
Operation voltage range	DC 10–30 V
Rated current I_N	DC 10 A
Supply current	DC 40 A over Cu-rails 10 × 3 mm
Reverse voltage protection	Internal electronics
Connection type input	Screwless contact slide

Control input (Set / Reset)

Signal level	DC 12/24 V acc. to IEC 61131-2

Output

Switching element	MOSFET
Output current	Max. DC 10 A
Voltage drop	Max. 215 mV (10 A)

Status display output	LED green: operating voltage present, no error LED red: error in load circuit
Switch-on capacity	10000 µF
Current range	2 A
Characteristic	Slow 1 (3)

Signal output

Signal level	DC 12/24 V: operating voltage on standby, no error, DC 0 V: error, output switched off and manual "OFF"
Switching element	Transistor, collector with pull-up resistance

General

Dimensions (w × h × d)	8.1 mm × 107.4 mm × 116.0 mm
Housing material	PA 6.6 (UL 94 V-0, NFF I2, F2)
Mounting	DIN rail mountable TS35 (EN 60715)
Installation position	Any
MTBF	690000 h
Degree of protection	IP20 (only as complete system with supply terminal and end block)
Connection type	Push-In 0.25 mm² – 2.5 mm² AWG 24 – AWG 14
Weight/unit	0.07 kg
PU (units)	1

General ambient conditions

Operation temperature range	-25 °C … +50 °C
Storage temperature range	-40 °C … +85 °C
Relative air humidity	10 % – 95 %, without condensation
Vibration resistance	4 g acc. to EN 60068-2-6
Shock resistance	15 g acc. EN 60068-2-27

Certifications/Standards

Conformity	CE UKCA
Certifications	cULus (E135145) URus (E490188)
Standards	EN 61000-2 EN 61000-3 UL 60947-5-1 UL 2367

Dimensions

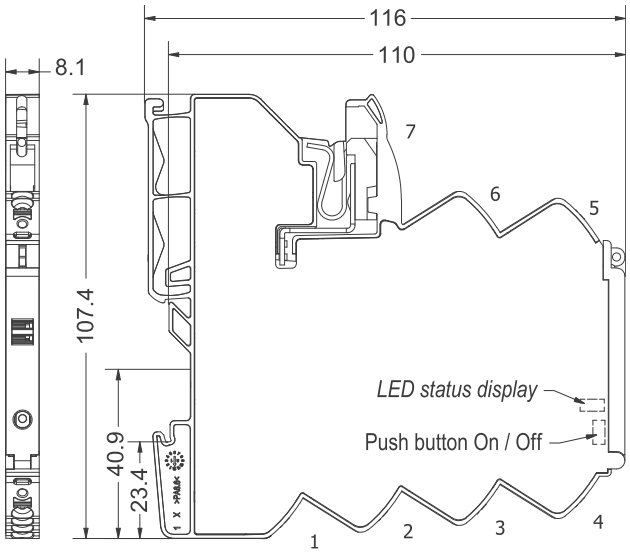

PIN assignment

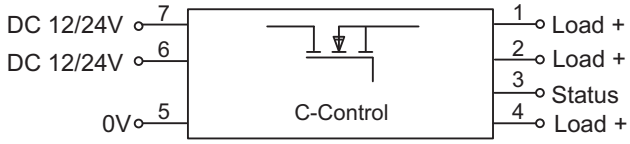

1: + Output
2: + Output
3: Status output
4: + Output
5: 0V
6: + Supply (alternative)
7: + Supply

3: Characteristic slow-1

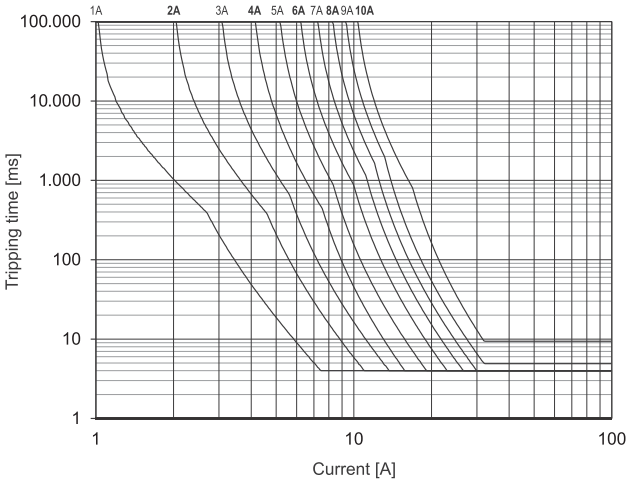

Use

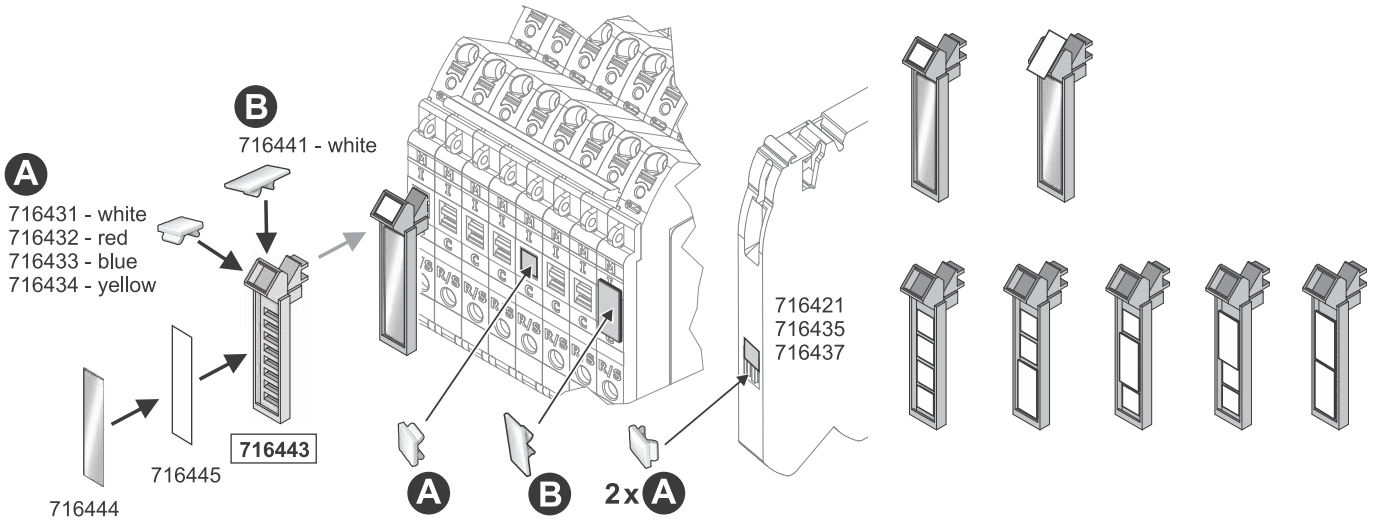

LED status

LED Status, Button, Rotary Switch

LED green	*ON*	*Function is OK**
LED green, flashing 1 Hz	*Overload*	*Load above 90 % of I nominal*
LED green, flashing 5 Hz	*Overload*	*Load above 100 % of I nominal*
LED red	*OFF*	*Module switched off or acknowledged**
LED red, flashing 1 Hz	*Overload*	*Output off due to overload/short circuit**
LED red, flashing 5 Hz	*Error*	*Wiring error – feedback (internal error)*
LED red, flashing shortly	*OFF*	*Output off via remote set/reset*
LED red/green, flashing 1 Hz	*ON*	*Target settings via rotary switch deviate from actual settings.* ***NOTICE: Switching off and on via pushbutton required.***
*Button ***	*ON/OFF*	*Nominal operation: ON/OFF* *Load monitoring tripped: 1st push: acknowledge* *2nd push: ON*

** If the operating voltage is switched off, the last status is saved (Default).*

*** Master function - switch off via push button, can only be switched on again via push button*

For further information see also the operating instructions

Signal output

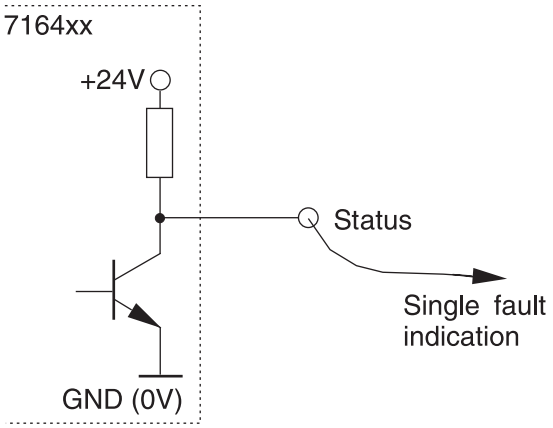

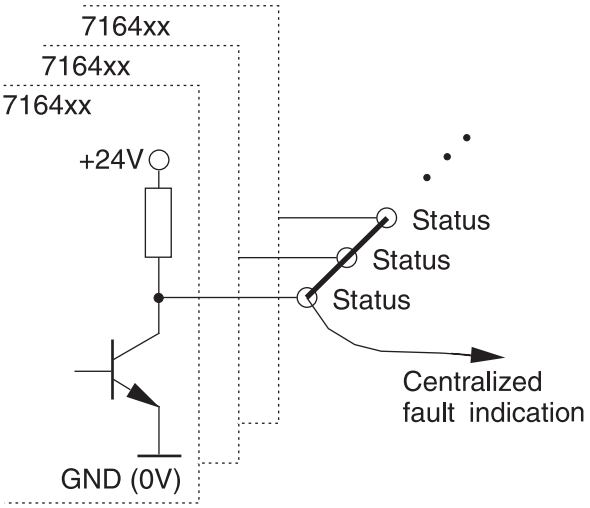

Mounting diagram

HINWEIS / NOTICE / AVIS

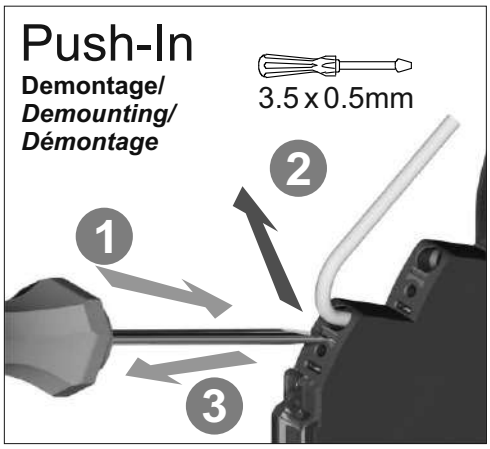

Technical data sheet

Load monitoring · LOCC-Box-EC

Electronic circuit breaker rated up to DC 10 A
Single channel version, fixed current range: DC 2 A
Fixed characteristic: slow 1

Identification

Type	LOCC-BOX-EC I2-C3
Part No.	716407.2350

Product version

Hardware revision	2.0
Software version	**2.6**
Datasheet version	00

Input

Type of function	1-channel 1 pin switching
Rated voltage U_N	DC 12/24 V
Operation voltage range	DC 10–30 V
Rated current I_N	DC 10 A
Supply current	DC 40 A over Cu-rails 10 × 3 mm
Reverse voltage protection	Internal electronics
Connection type input	Screwless contact slide

Control input (Set / Reset)

Signal level	DC 12/24 V acc. to IEC 61131-2

Output

Switching element	MOSFET
Output current	Max. DC 10 A
Voltage drop	Max. 215 mV (10 A)

Status display output	LED green: operating voltage present, no error LED red: error in load circuit
Switch-on capacity	10000 µF
Current range	2 A
Characteristic	Slow 1 (3)

Signal output

Signal level	DC 12/24 V: operating voltage on standby, no error, DC 0 V: error, output switched off and manual "OFF"
Switching element	Transistor, collector with pull-up resistance

General

Dimensions (w × h × d)	8.1 mm × 107.4 mm × 116.0 mm
Housing material	PA 6.6 (UL 94 V-0, NFF I2, F2)
Mounting	DIN rail mountable TS35 (EN 60715)
Installation position	Any
MTBF	690000 h
Degree of protection	IP20 (only as complete system with supply terminal and end block)
Connection type	Push-In 0.25 mm² – 2.5 mm² AWG 24 – AWG 14
Weight/unit	0.07 kg
PU (units)	50

General ambient conditions

Operation temperature range	-25 °C … +50 °C
Storage temperature range	-40 °C … +85 °C
Relative air humidity	10 % – 95 %, without condensation
Vibration resistance	4 g acc. to EN 60068-2-6
Shock resistance	15 g acc. EN 60068-2-27

Certifications/Standards

Conformity	CE UKCA
Certifications	cULus (E135145) URus (E490188)
Standards	EN 61000-2 EN 61000-3 UL 60947-5-1 UL 2367

Dimensions

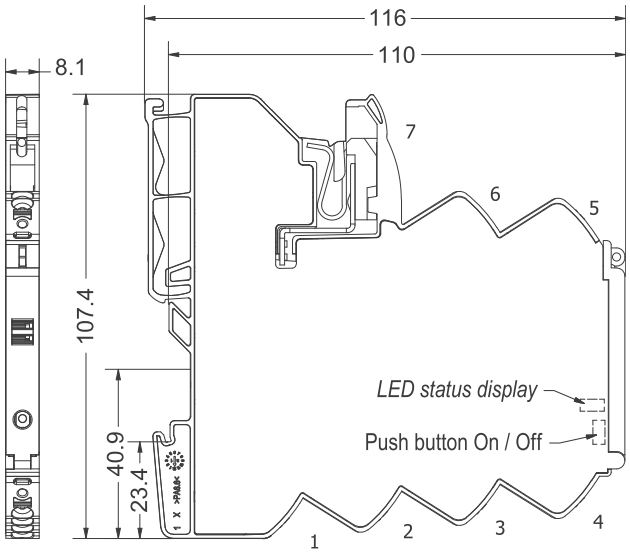

PIN assignment

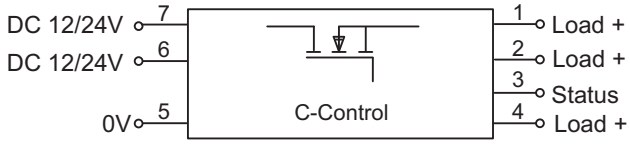

1: + Output
2: + Output
3: Status output
4: + Output
5: 0V
6: + Supply (alternative)
7: + Supply

3: Characteristic slow-1

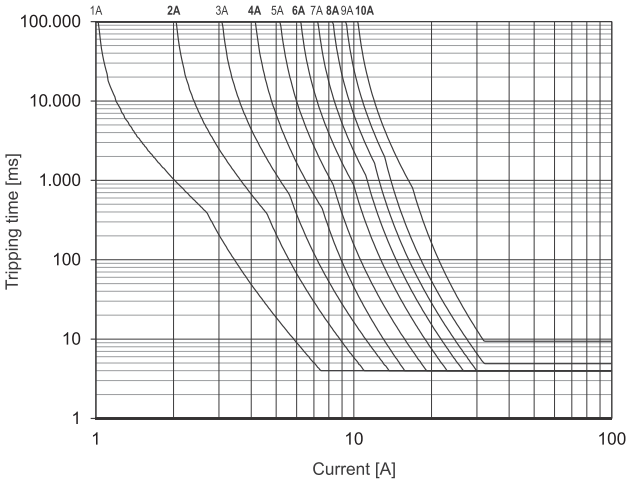

Use

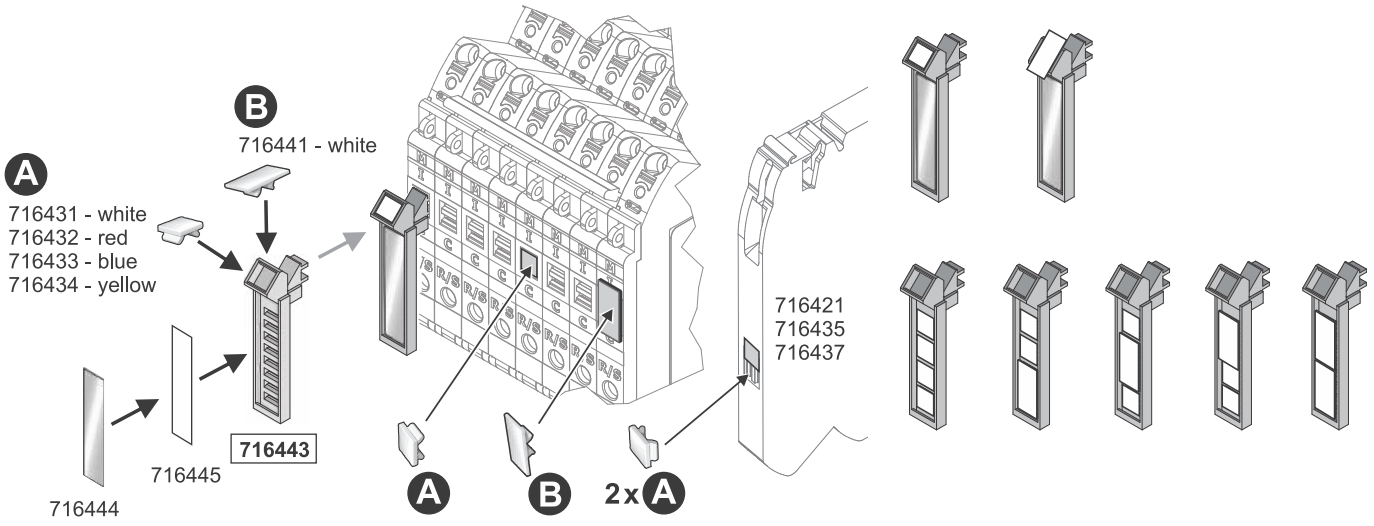

LED status

LED Status, Button, Rotary Switch

LED green	*ON*	*Function is OK**
LED green, flashing 1 Hz	*Overload*	*Load above 90 % of I nominal*
LED green, flashing 5 Hz	*Overload*	*Load above 100 % of I nominal*
LED red	*OFF*	*Module switched off or acknowledged**
LED red, flashing 1 Hz	*Overload*	*Output off due to overload/short circuit**
LED red, flashing 5 Hz	*Error*	*Wiring error – feedback (internal error)*
LED red, flashing shortly	*OFF*	*Output off via remote set/reset*
LED red/green, flashing 1 Hz	*ON*	*Target settings via rotary switch deviate from actual settings.* ***NOTICE: Switching off and on via pushbutton required.***
*Button ***	*ON/OFF*	*Nominal operation: ON/OFF* *Load monitoring tripped: 1st push: acknowledge* *2nd push: ON*

** If the operating voltage is switched off, the last status is saved (Default).*

*** Master function - switch off via push button, can only be switched on again via push button*

For further information see also the operating instructions

Signal output

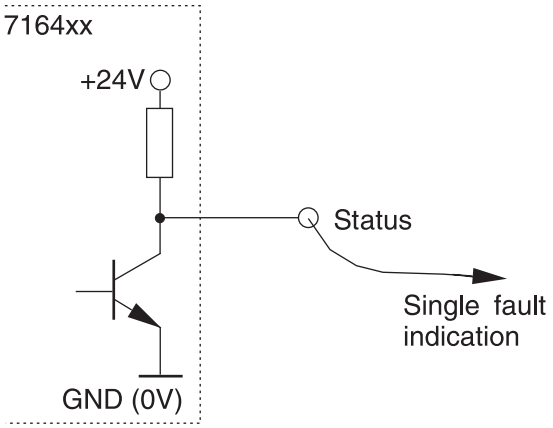

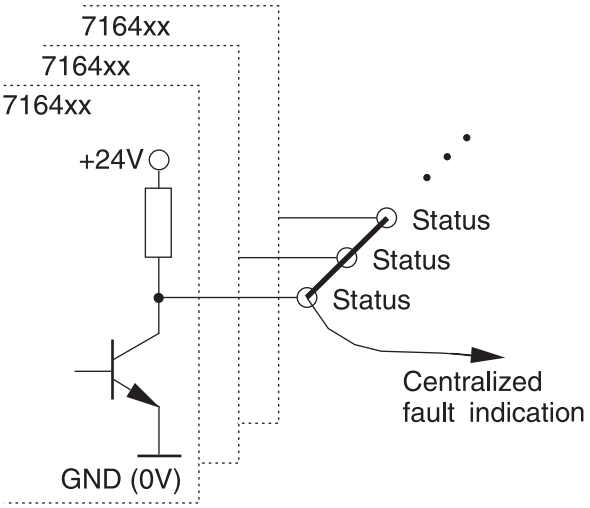

Mounting diagram

HINWEIS / NOTICE / AVIS

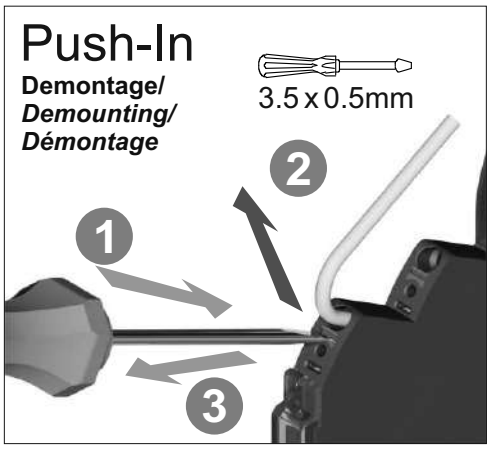

Technical data sheet

Load monitoring · LOCC-Box-EC

Electronic circuit breaker rated up to DC 10 A
Single channel version, fixed current range: DC 3 A
Fixed characteristic: slow 1

Identification

Type	LOCC-BOX-EC I3-C3
Part No.	716407.3300

Product version

Hardware revision	2.0
Software version	**2.6**
Datasheet version	00

Input

Type of function	1-channel 1 pin switching
Rated voltage U_N	DC 12/24 V
Operation voltage range	DC 10–30 V
Rated current I_N	DC 10 A
Supply current	DC 40 A over Cu-rails 10 × 3 mm
Reverse voltage protection	Internal electronics
Connection type input	Screwless contact slide

Control input (Set / Reset)

Signal level	DC 12/24 V acc. to IEC 61131-2

Output

Switching element	MOSFET
Output current	Max. DC 10 A
Voltage drop	Max. 215 mV (10 A)

Status display output	LED green: operating voltage present, no error LED red: error in load circuit
Switch-on capacity	10000 µF
Current range	3 A
Characteristic	Slow 1 (3)

Signal output

Signal level	DC 12/24 V: operating voltage on standby, no error, DC 0 V: error, output switched off and manual "OFF"
Switching element	Transistor, collector with pull-up resistance

General

Dimensions (w × h × d)	8.1 mm × 107.4 mm × 116.0 mm
Housing material	PA 6.6 (UL 94 V-0, NFF I2, F2)
Mounting	DIN rail mountable TS35 (EN 60715)
Installation position	Any
MTBF	690000 h
Degree of protection	IP20 (only as complete system with supply terminal and end block)
Connection type	Push-In 0.25 mm² – 2.5 mm² AWG 24 – AWG 14
Weight/unit	0.07 kg
PU (units)	1

General ambient conditions

Operation temperature range	-25 °C … +50 °C
Storage temperature range	-40 °C … +85 °C
Relative air humidity	10 % – 95 %, without condensation
Vibration resistance	4 g acc. to EN 60068-2-6
Shock resistance	15 g acc. EN 60068-2-27

Certifications/Standards

Conformity	CE UKCA
Certifications	cULus (E135145) URus (E490188)
Standards	EN 61000-2 EN 61000-3 UL 60947-5-1 UL 2367

Dimensions

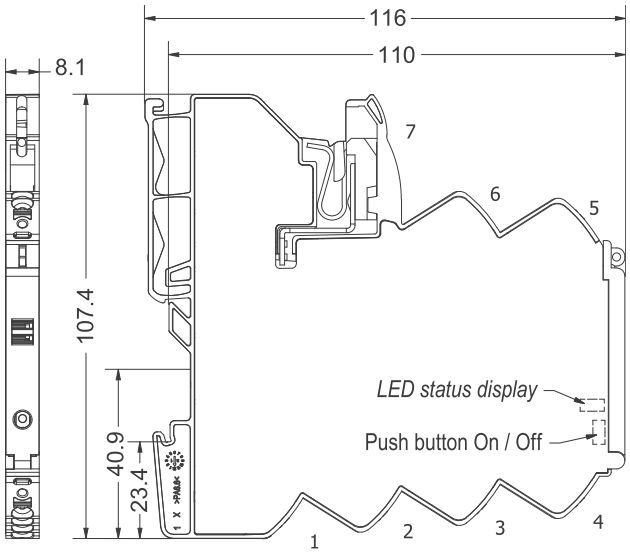

PIN assignment

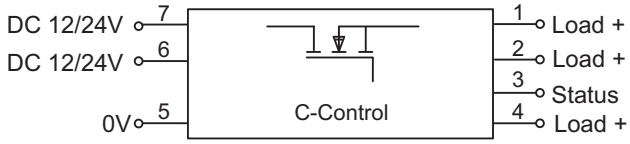

1: + Output
2: + Output
3: Status output
4: + Output
5: 0V
6: + Supply (alternative)
7: + Supply

3: Characteristic slow-1

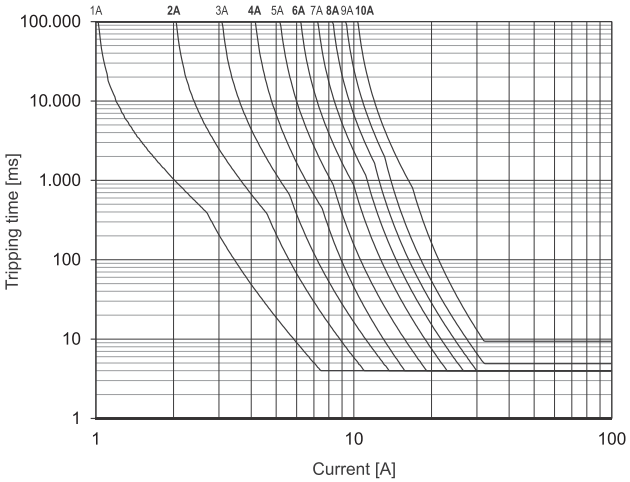

Use

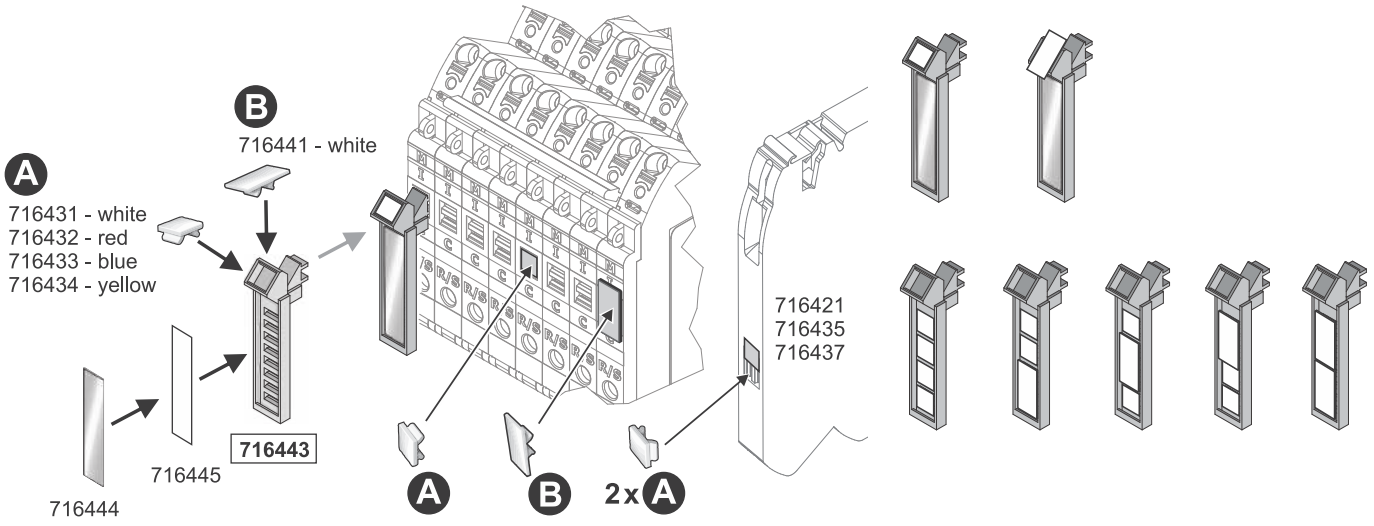

LED status

LED Status, Button, Rotary Switch

LED green	*ON*	*Function is OK**
LED green, flashing 1 Hz	*Overload*	*Load above 90 % of I nominal*
LED green, flashing 5 Hz	*Overload*	*Load above 100 % of I nominal*
LED red	*OFF*	*Module switched off or acknowledged**
LED red, flashing 1 Hz	*Overload*	*Output off due to overload/short circuit**
LED red, flashing 5 Hz	*Error*	*Wiring error – feedback (internal error)*
LED red, flashing shortly	*OFF*	*Output off via remote set/reset*
LED red/green, flashing 1 Hz	*ON*	*Target settings via rotary switch deviate from actual settings.* ***NOTICE: Switching off and on via pushbutton required.***
*Button ***	*ON/OFF*	*Nominal operation: ON/OFF* *Load monitoring tripped: 1st push: acknowledge* *2nd push: ON*

** If the operating voltage is switched off, the last status is saved (Default).*

*** Master function - switch off via push button, can only be switched on again via push button*

For further information see also the operating instructions

Signal output

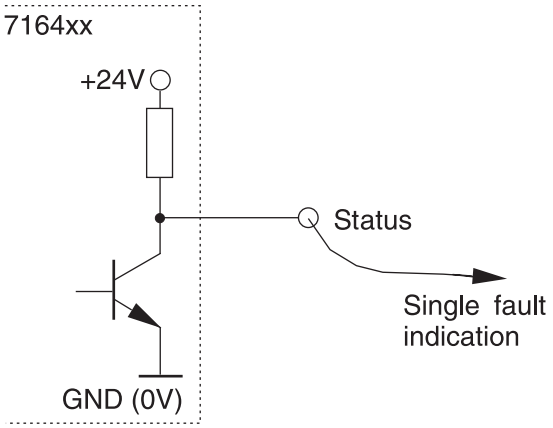

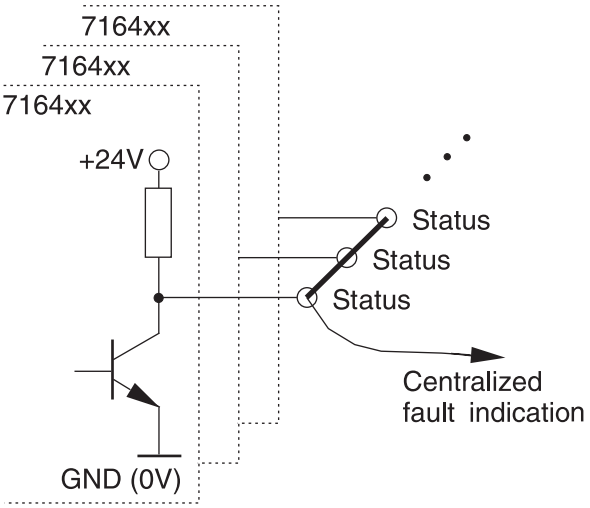

Mounting diagram

HINWEIS / NOTICE / AVIS

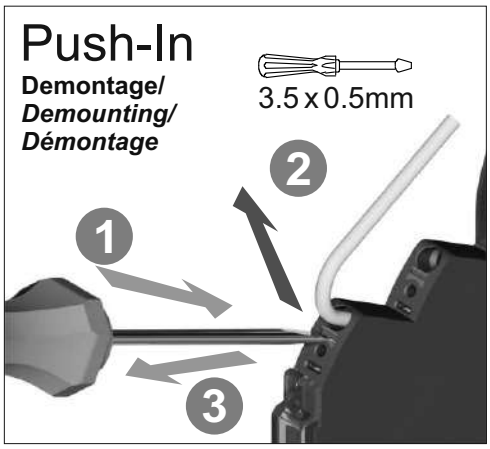

Technical data sheet

Load monitoring · LOCC-Box-EC

Electronic circuit breaker rated up to DC 10 A
Single channel version, fixed current range: DC 4 A
Fixed characteristic: slow 1

Identification

Type	LOCC-BOX-EC I4-C3
Part No.	716407.4300

Product version

Hardware revision	2.0
Software version	**2.6**
Datasheet version	00

Input

Type of function	1-channel 1 pin switching
Rated voltage U_N	DC 12/24 V
Operation voltage range	DC 10–30 V
Rated current I_N	DC 10 A
Supply current	DC 40 A over Cu-rails 10 × 3 mm
Reverse voltage protection	Internal electronics
Connection type input	Screwless contact slide

Control input (Set / Reset)

Signal level	DC 12/24 V acc. to IEC 61131-2

Output

Switching element	MOSFET
Output current	Max. DC 10 A
Voltage drop	Max. 215 mV (10 A)

Status display output	LED green: operating voltage present, no error LED red: error in load circuit
Switch-on capacity	10000 µF
Current range	4 A
Characteristic	Slow 1 (3)

Signal output

Signal level	DC 12/24 V: operating voltage on standby, no error, DC 0 V: error, output switched off and manual "OFF"
Switching element	Transistor, collector with pull-up resistance

General

Dimensions (w × h × d)	8.1 mm × 107.4 mm × 116.0 mm
Housing material	PA 6.6 (UL 94 V-0, NFF I2, F2)
Mounting	DIN rail mountable TS35 (EN 60715)
Installation position	Any
MTBF	690000 h
Degree of protection	IP20 (only as complete system with supply terminal and end block)
Connection type	Push-In 0.25 mm² – 2.5 mm² AWG 24 – AWG 14
Weight/unit	0.07 kg
PU (units)	1

General ambient conditions

Operation temperature range	-25 °C … +50 °C
Storage temperature range	-40 °C … +85 °C
Relative air humidity	10 % – 95 %, without condensation
Vibration resistance	4 g acc. to EN 60068-2-6
Shock resistance	15 g acc. EN 60068-2-27

Certifications/Standards

Conformity	CE UKCA
Certifications	cULus (E135145) URus (E490188)
Standards	EN 61000-2 EN 61000-3 UL 60947-5-1 UL 2367

Dimensions

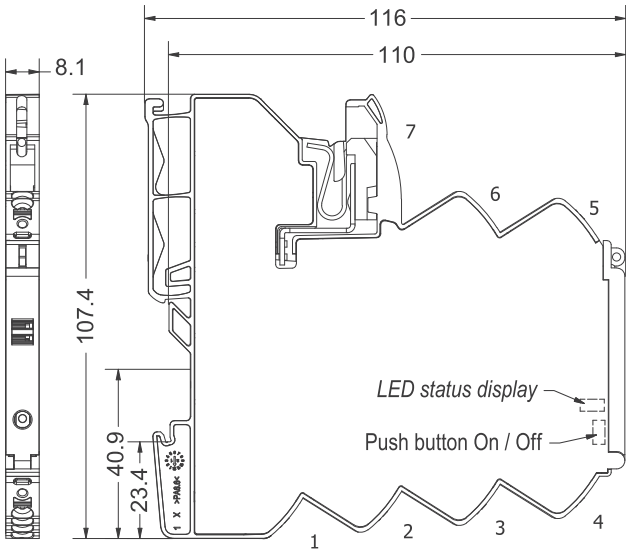

PIN assignment

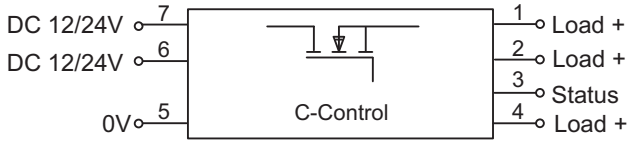

1: + Output
2: + Output
3: Status output
4: + Output
5: 0V
6: + Supply (alternative)
7: + Supply

3: Characteristic slow-1

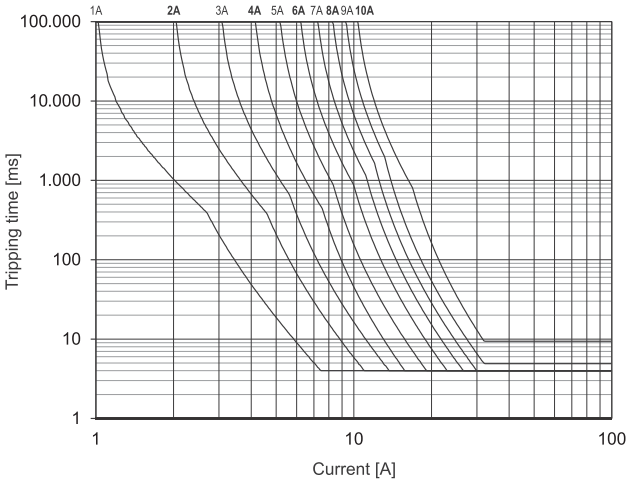

Use

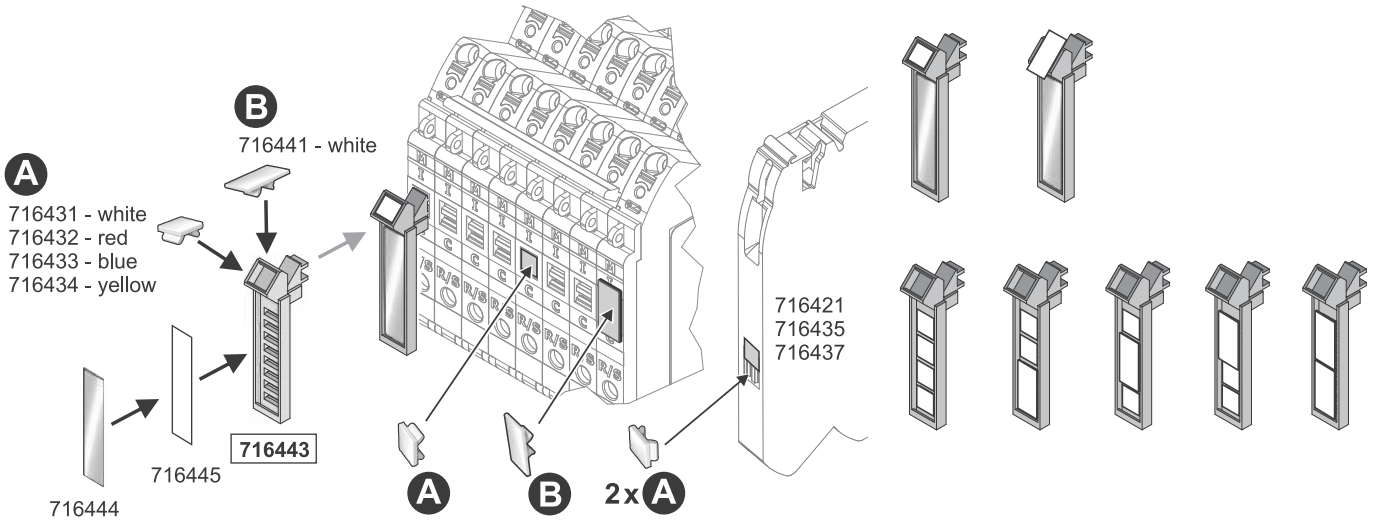

LED status

LED Status, Button, Rotary Switch

LED green	*ON*	*Function is OK**
LED green, flashing 1 Hz	*Overload*	*Load above 90 % of I nominal*
LED green, flashing 5 Hz	*Overload*	*Load above 100 % of I nominal*
LED red	*OFF*	*Module switched off or acknowledged**
LED red, flashing 1 Hz	*Overload*	*Output off due to overload/short circuit**
LED red, flashing 5 Hz	*Error*	*Wiring error – feedback (internal error)*
LED red, flashing shortly	*OFF*	*Output off via remote set/reset*
LED red/green, flashing 1 Hz	*ON*	*Target settings via rotary switch deviate from actual settings.* ***NOTICE: Switching off and on via pushbutton required.***
*Button ***	*ON/OFF*	*Nominal operation: ON/OFF* *Load monitoring tripped: 1st push: acknowledge* *2nd push: ON*

** If the operating voltage is switched off, the last status is saved (Default).*

*** Master function - switch off via push button, can only be switched on again via push button*

For further information see also the operating instructions

Signal output

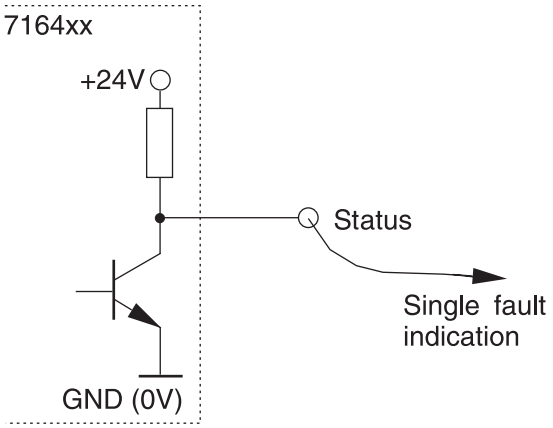

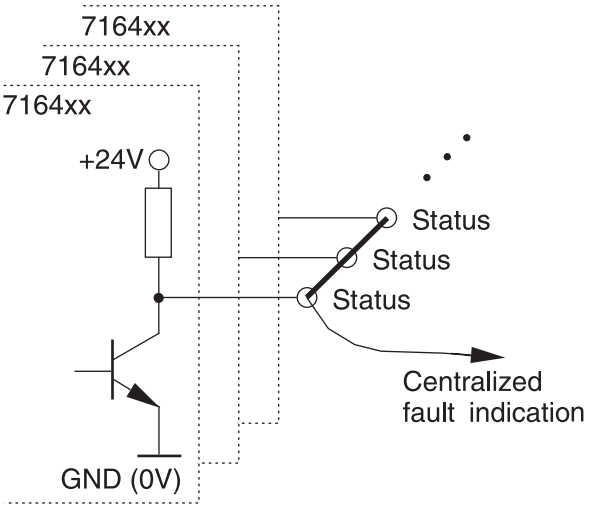

Mounting diagram

HINWEIS / NOTICE / AVIS

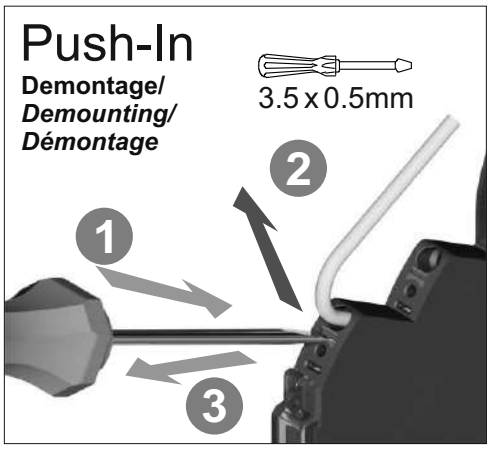

Technical data sheet

Load monitoring · LOCC-Box-EC

Electronic circuit breaker rated up to DC 10 A
Single channel version, fixed current range: DC 6 A
Fixed characteristic: slow 1

Identification

Type	LOCC-BOX-EC I6-C3
Part No.	716407.6300

Product version

Hardware revision	2.0
Software version	**2.6**
Datasheet version	00

Input

Type of function	1-channel 1 pin switching
Rated voltage U_N	DC 12/24 V
Operation voltage range	DC 10–30 V
Rated current I_N	DC 10 A
Supply current	DC 40 A over Cu-rails 10 × 3 mm
Reverse voltage protection	Internal electronics
Connection type input	Screwless contact slide

Control input (Set / Reset)

Signal level	DC 12/24 V acc. to IEC 61131-2

Output

Switching element	MOSFET
Output current	Max. DC 10 A
Voltage drop	Max. 215 mV (10 A)

Status display output	LED green: operating voltage present, no error LED red: error in load circuit
Switch-on capacity	10000 µF
Current range	6 A
Characteristic	Slow 1 (3)

Signal output

Signal level	DC 12/24 V: operating voltage on standby, no error, DC 0 V: error, output switched off and manual "OFF"
Switching element	Transistor, collector with pull-up resistance

General

Dimensions (w × h × d)	8.1 mm × 107.4 mm × 116.0 mm
Housing material	PA 6.6 (UL 94 V-0, NFF I2, F2)
Mounting	DIN rail mountable TS35 (EN 60715)
Installation position	Any
MTBF	690000 h
Degree of protection	IP20 (only as complete system with supply terminal and end block)
Connection type	Push-In 0.25 mm² – 2.5 mm² AWG 24 – AWG 14
Weight/unit	0.07 kg
PU (units)	1

General ambient conditions

Operation temperature range	-25 °C … +50 °C
Storage temperature range	-40 °C … +85 °C
Relative air humidity	10 % – 95 %, without condensation
Vibration resistance	4 g acc. to EN 60068-2-6
Shock resistance	15 g acc. EN 60068-2-27

Certifications/Standards

Conformity	CE UKCA
Certifications	cULus (E135145) URus (E490188)
Standards	EN 61000-2 EN 61000-3 UL 60947-5-1 UL 2367

Dimensions

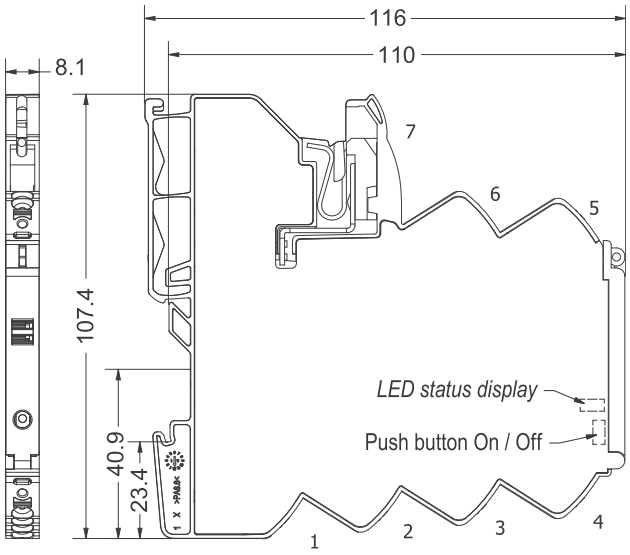

PIN assignment

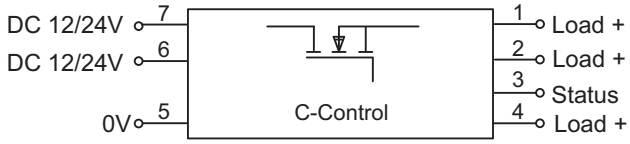

1: + Output
2: + Output
3: Status output
4: + Output
5: 0V
6: + Supply (alternative)
7: + Supply

3: Characteristic slow-1

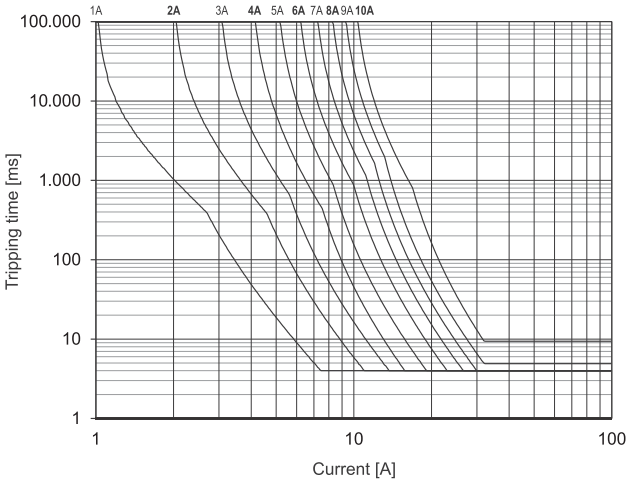

Use

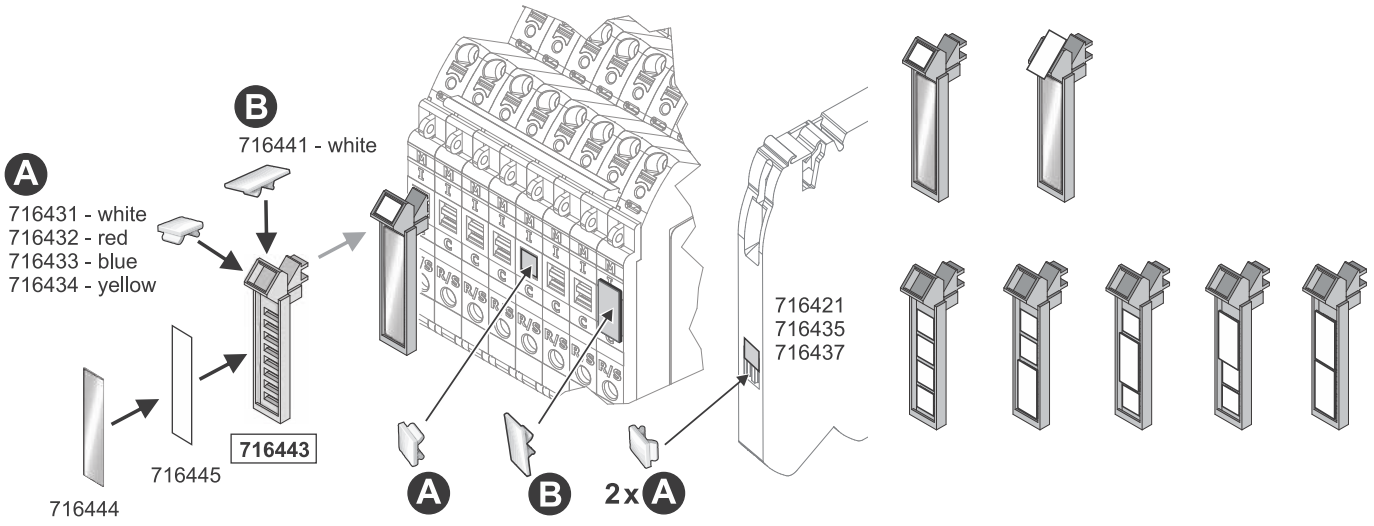

LED status

LED Status, Button, Rotary Switch

LED green	*ON*	*Function is OK**
LED green, flashing 1 Hz	*Overload*	*Load above 90 % of I nominal*
LED green, flashing 5 Hz	*Overload*	*Load above 100 % of I nominal*
LED red	*OFF*	*Module switched off or acknowledged**
LED red, flashing 1 Hz	*Overload*	*Output off due to overload/short circuit**
LED red, flashing 5 Hz	*Error*	*Wiring error – feedback (internal error)*
LED red, flashing shortly	*OFF*	*Output off via remote set/reset*
LED red/green, flashing 1 Hz	*ON*	*Target settings via rotary switch deviate from actual settings.* ***NOTICE: Switching off and on via pushbutton required.***
*Button ***	*ON/OFF*	*Nominal operation: ON/OFF* *Load monitoring tripped: 1st push: acknowledge* *2nd push: ON*

** If the operating voltage is switched off, the last status is saved (Default).*

*** Master function - switch off via push button, can only be switched on again via push button*

For further information see also the operating instructions

Signal output

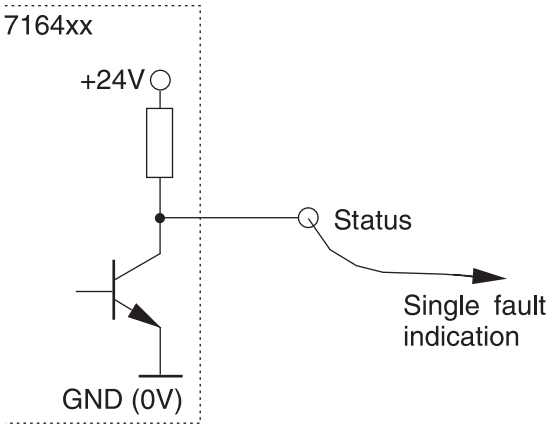

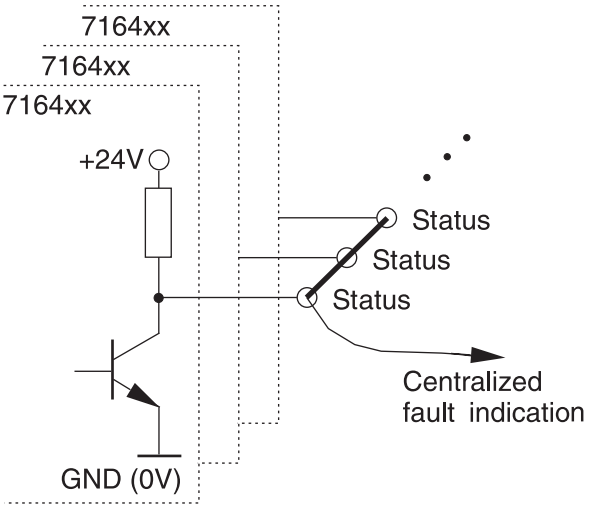

Mounting diagram

HINWEIS / NOTICE / AVIS

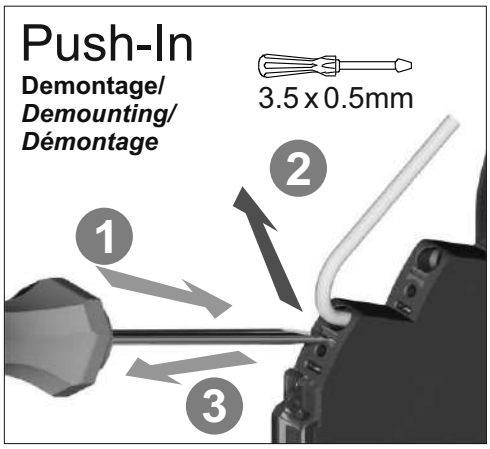

Technical data sheet

Load monitoring · LOCC-Box-EC

Electronic circuit breaker rated up to DC 10 A
Single channel version, fixed current range: DC 7 A
Fixed characteristic: slow 1

Identification

Type	LOCC-BOX-EC I7-C3
Part No.	716407.7300

Product version

Hardware revision	2.0
Software version	**2.6**
Datasheet version	00

Input

Type of function	1-channel 1 pin switching
Rated voltage U_N	DC 12/24 V
Operation voltage range	DC 10–30 V
Rated current I_N	DC 10 A
Supply current	DC 40 A over Cu-rails 10 × 3 mm
Reverse voltage protection	Internal electronics
Connection type input	Screwless contact slide

Control input (Set / Reset)

Signal level	DC 12/24 V acc. to IEC 61131-2

Output

Switching element	MOSFET
Output current	Max. DC 10 A
Voltage drop	Max. 215 mV (10 A)

Status display output	LED green: operating voltage present, no error LED red: error in load circuit
Switch-on capacity	10000 µF
Current range	7 A
Characteristic	Slow 1 (3)

Signal output

Signal level	DC 12/24 V: operating voltage on standby, no error, DC 0 V: error, output switched off and manual "OFF"
Switching element	Transistor, collector with pull-up resistance

General

Dimensions (w × h × d)	8.1 mm × 107.4 mm × 116.0 mm
Housing material	PA 6.6 (UL 94 V-0, NFF I2, F2)
Mounting	DIN rail mountable TS35 (EN 60715)
Installation position	Any
MTBF	690000 h
Degree of protection	IP20 (only as complete system with supply terminal and end block)
Connection type	Push-In 0.25 mm² – 2.5 mm² AWG 24 – AWG 14
Weight/unit	0.07 kg
PU (units)	1

General ambient conditions

Operation temperature range	-25 °C … +50 °C
Storage temperature range	-40 °C … +85 °C
Relative air humidity	10 % – 95 %, without condensation
Vibration resistance	4 g acc. to EN 60068-2-6
Shock resistance	15 g acc. EN 60068-2-27

Certifications/Standards

Conformity	CE UKCA
Certifications	cULus (E135145) URus (E490188)
Standards	EN 61000-2 EN 61000-3 UL 60947-5-1 UL 2367

Dimensions

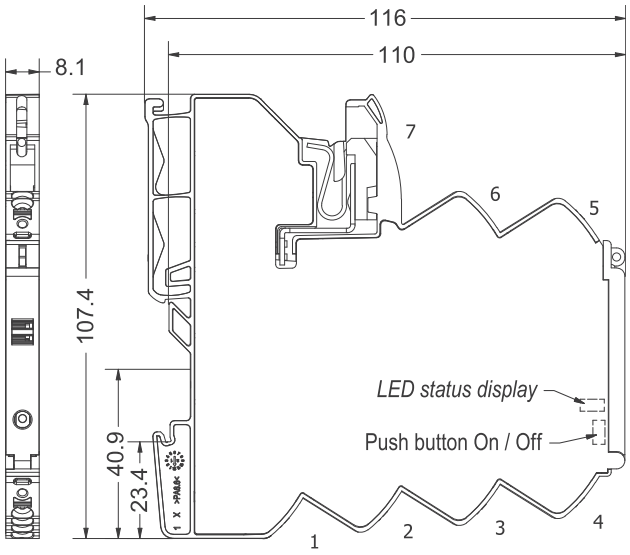

PIN assignment

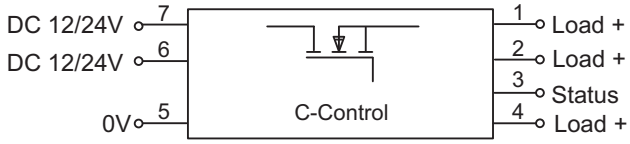

1: + Output
2: + Output
3: Status output
4: + Output
5: 0V
6: + Supply (alternative)
7: + Supply

3: Characteristic slow-1

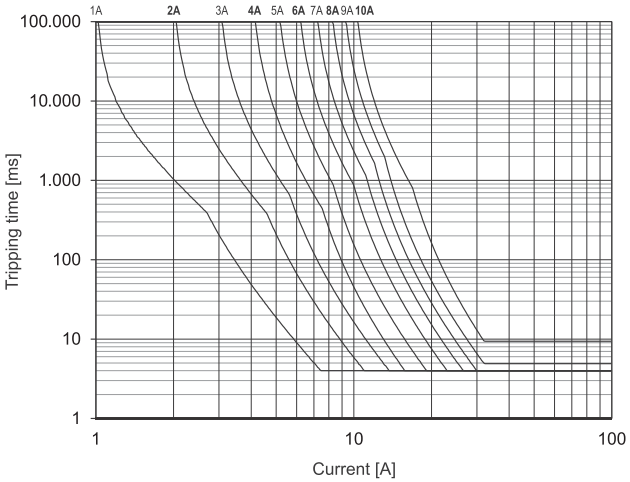

Use

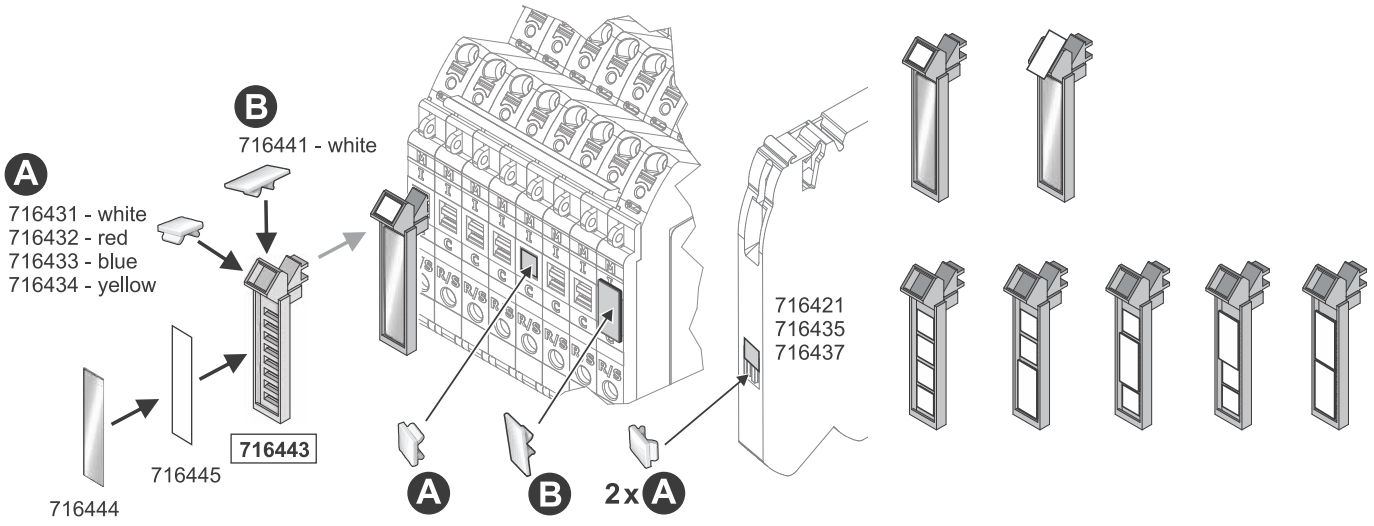

LED status

LED Status, Button, Rotary Switch

LED green	*ON*	*Function is OK**
LED green, flashing 1 Hz	*Overload*	*Load above 90 % of I nominal*
LED green, flashing 5 Hz	*Overload*	*Load above 100 % of I nominal*
LED red	*OFF*	*Module switched off or acknowledged**
LED red, flashing 1 Hz	*Overload*	*Output off due to overload/short circuit**
LED red, flashing 5 Hz	*Error*	*Wiring error – feedback (internal error)*
LED red, flashing shortly	*OFF*	*Output off via remote set/reset*
LED red/green, flashing 1 Hz	*ON*	*Target settings via rotary switch deviate from actual settings.* ***NOTICE: Switching off and on via pushbutton required.***
*Button ***	*ON/OFF*	*Nominal operation: ON/OFF* *Load monitoring tripped: 1st push: acknowledge* *2nd push: ON*

** If the operating voltage is switched off, the last status is saved (Default).*

*** Master function - switch off via push button, can only be switched on again via push button*

For further information see also the operating instructions

Signal output

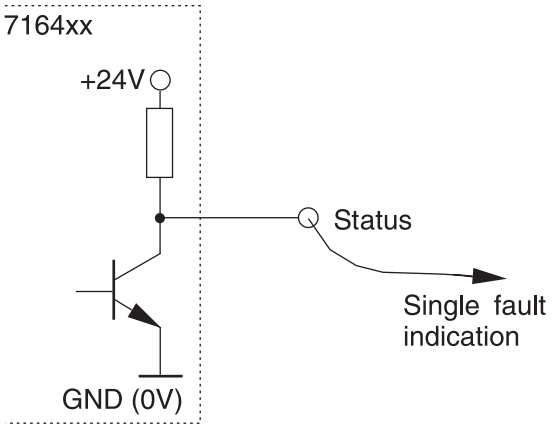

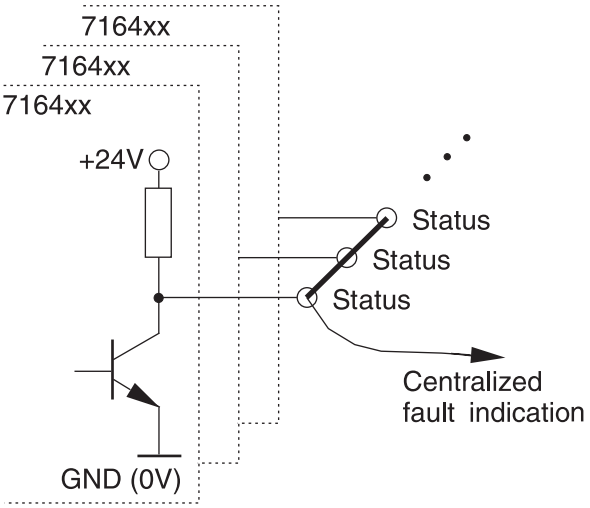

Mounting diagram

HINWEIS / NOTICE / AVIS

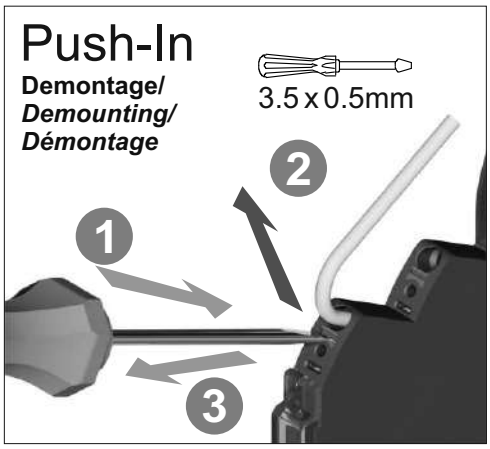

Technical data sheet

Load monitoring · LOCC-Box-EC

Electronic circuit breaker rated up to DC 10 A
Single channel version, fixed current range: DC 8 A
Fixed characteristic: slow 1

Identification

Type	LOCC-BOX-EC I8-C3
Part No.	716407.8300

Product version

Hardware revision	2.0
Software version	**2.6**
Datasheet version	00

Input

Type of function	1-channel 1 pin switching
Rated voltage U_N	DC 12/24 V
Operation voltage range	DC 10–30 V
Rated current I_N	DC 10 A
Supply current	DC 40 A over Cu-rails 10 × 3 mm
Reverse voltage protection	Internal electronics
Connection type input	Screwless contact slide

Control input (Set / Reset)

Signal level	DC 12/24 V acc. to IEC 61131-2

Output

Switching element	MOSFET
Output current	Max. DC 10 A
Voltage drop	Max. 215 mV (10 A)

Status display output	LED green: operating voltage present, no error LED red: error in load circuit
Switch-on capacity	10000 µF
Current range	8 A
Characteristic	Slow 1 (3)

Signal output

Signal level	DC 12/24 V: operating voltage on standby, no error, DC 0 V: error, output switched off and manual "OFF"
Switching element	Transistor, collector with pull-up resistance

General

Dimensions (w × h × d)	8.1 mm × 107.4 mm × 116.0 mm
Housing material	PA 6.6 (UL 94 V-0, NFF I2, F2)
Mounting	DIN rail mountable TS35 (EN 60715)
Installation position	Any
MTBF	690000 h
Degree of protection	IP20 (only as complete system with supply terminal and end block)
Connection type	Push-In 0.25 mm² – 2.5 mm² AWG 24 – AWG 14
Weight/unit	0.07 kg
PU (units)	1

General ambient conditions

Operation temperature range	-25 °C … +50 °C
Storage temperature range	-40 °C … +85 °C
Relative air humidity	10 % – 95 %, without condensation
Vibration resistance	4 g acc. to EN 60068-2-6
Shock resistance	15 g acc. EN 60068-2-27

Certifications/Standards

Conformity	CE UKCA
Certifications	cULus (E135145) URus (E490188)
Standards	EN 61000-2 EN 61000-3 UL 60947-5-1 UL 2367

Dimensions

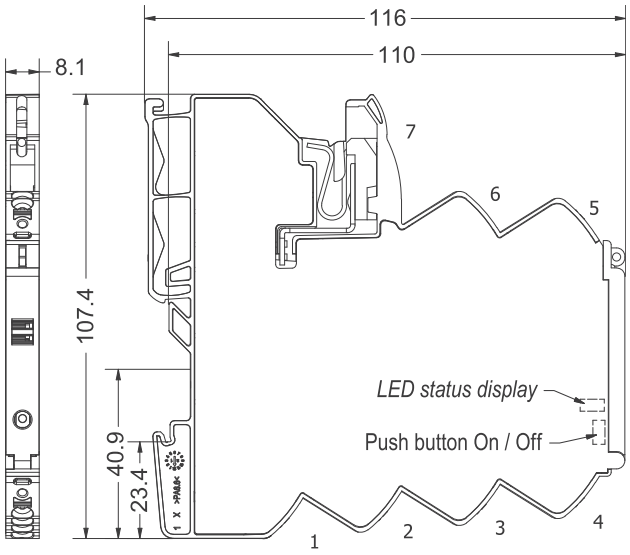

PIN assignment

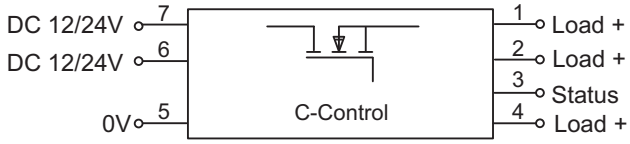

1: + Output
2: + Output
3: Status output
4: + Output
5: 0V
6: + Supply (alternative)
7: + Supply

3: Characteristic slow-1

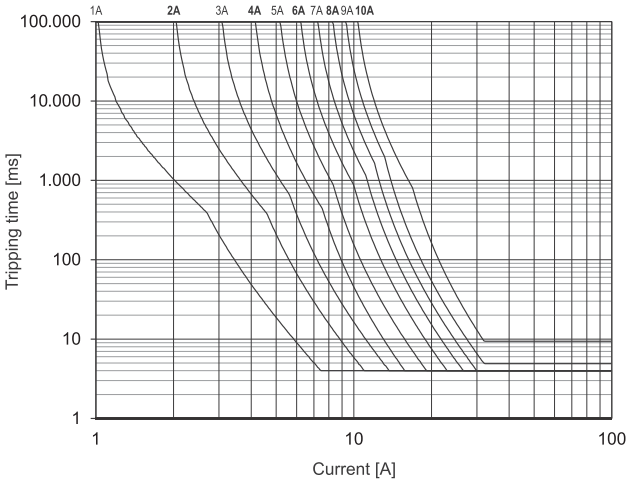

Use

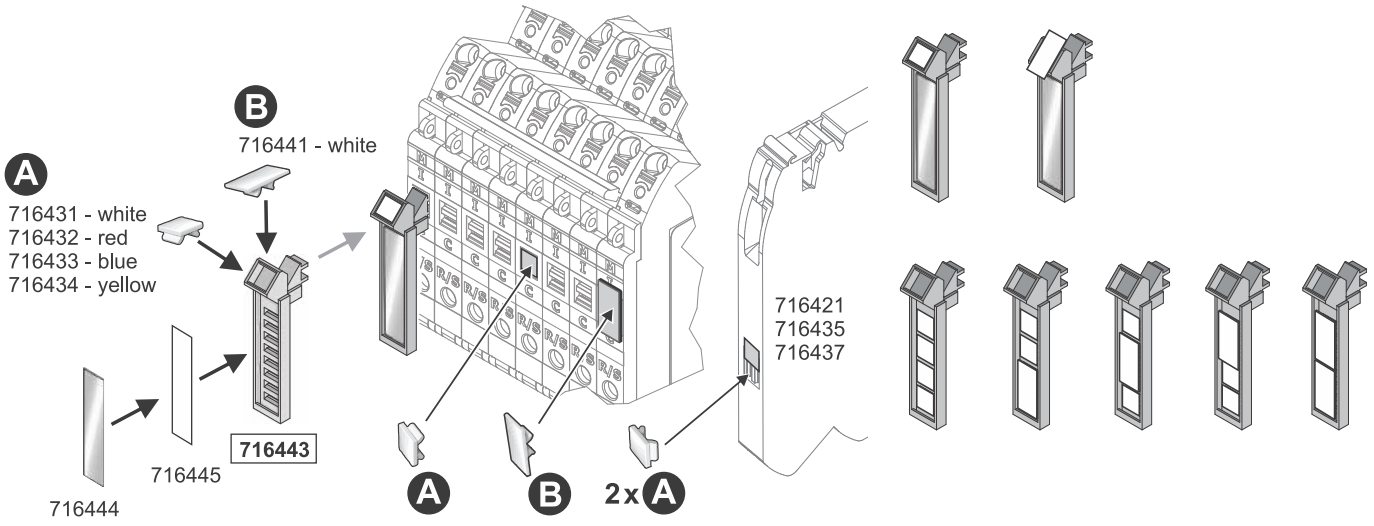

LED status

LED Status, Button, Rotary Switch

LED green	*ON*	*Function is OK**
LED green, flashing 1 Hz	*Overload*	*Load above 90 % of I nominal*
LED green, flashing 5 Hz	*Overload*	*Load above 100 % of I nominal*
LED red	*OFF*	*Module switched off or acknowledged**
LED red, flashing 1 Hz	*Overload*	*Output off due to overload/short circuit**
LED red, flashing 5 Hz	*Error*	*Wiring error – feedback (internal error)*
LED red, flashing shortly	*OFF*	*Output off via remote set/reset*
LED red/green, flashing 1 Hz	*ON*	*Target settings via rotary switch deviate from actual settings.* ***NOTICE: Switching off and on via pushbutton required.***
*Button ***	*ON/OFF*	*Nominal operation: ON/OFF* *Load monitoring tripped: 1st push: acknowledge* *2nd push: ON*

** If the operating voltage is switched off, the last status is saved (Default).*

*** Master function - switch off via push button, can only be switched on again via push button*

For further information see also the operating instructions

Signal output

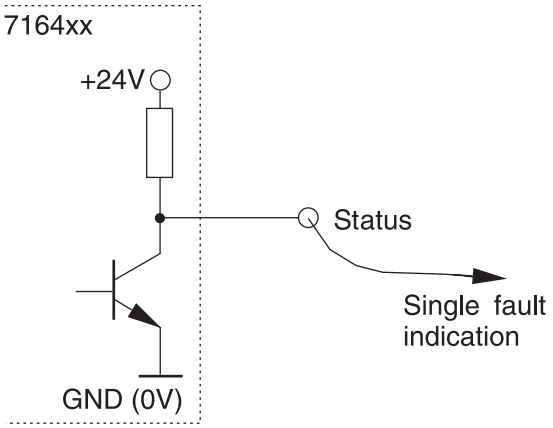

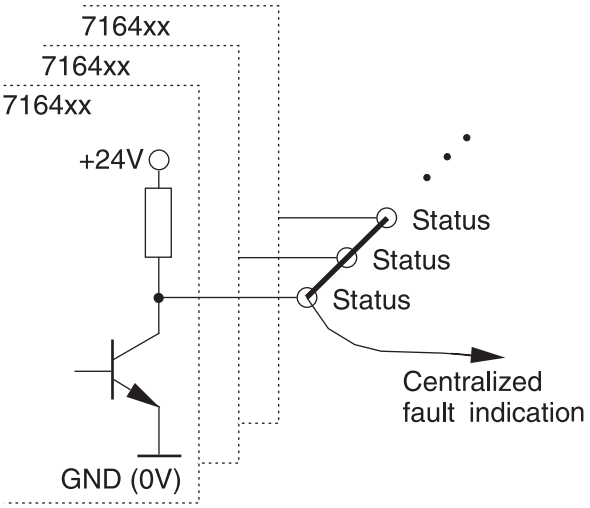

Mounting diagram

HINWEIS / NOTICE / AVIS

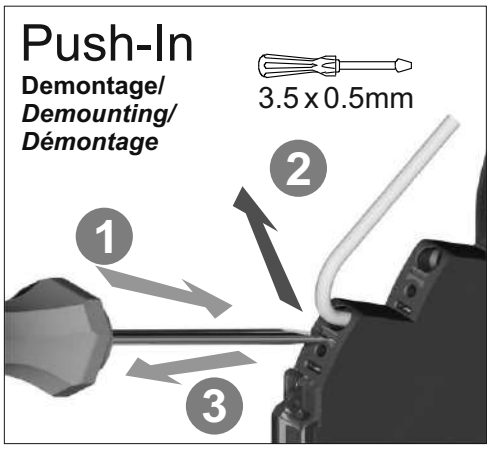

Technical data sheet

Load monitoring · LOCC-Box-EC · See order code

Electronic circuit breaker rated up to DC 10 A
Single channel version, fixed current range: DC 1 A - 10 A (see order code)
Fixed characteristic: fast, medium, slow 1, -2, -3 (see order code)

Identification

Type	LOCC-Box-EC-I-C
Part No.	716407.xxxx

Product version

Hardware revision	2.0
Software version	**2.6**
Datasheet version	02

Input

Type of function	1-channel 1 pin switching
Rated voltage U_N	DC 12/24 V
Operation voltage range	DC 10–30 V
Rated current I_N	DC 10 A
Supply current	DC 40 A over Cu-rails 10 × 3 mm
Reverse voltage protection	Internal electronics
Connection type input	Screwless contact slide

Control input (Set / Reset)

Signal level	DC 12/24 V acc. to IEC 61131-2

Output

Switching element	MOSFET
Output current	Max. DC 10 A
Voltage drop	Max. 215 mV (10 A)

Status display output	LED green: operating voltage present, no error LED red: error in load circuit
Switch-on capacity	10000 µF
Current range	1 A – 10 A (see order code)
Characteristic	Fast (1), medium (2), slow 1 (3), slow 2 (4), slow 3 (5) (see order code), see 'characteristic curves'

Signal output

Signal level	DC 12/24 V: operating voltage on standby, no error, DC 0 V: error, output switched off and manual "OFF"
Switching element	Transistor, collector with pull-up resistance

General

Dimensions (w × h × d)	8.1 mm × 107.4 mm × 116.0 mm
Housing material	PA 6.6 (UL 94 V-0, NFF I2, F2)
Mounting	DIN rail mountable TS35 (EN 60715)
Installation position	Any
MTBF	690000 h
Degree of protection	IP20 (only as complete system with supply terminal and end block)
Connection type	Push-In 0.25 mm² – 2.5 mm² AWG 24 – AWG 14
Weight/unit	0.07 kg
PU (units)	1

General ambient conditions

Operation temperature range	-25 °C . . . +50 °C
Storage temperature range	-40 °C . . . +85 °C
Relative air humidity	10 % – 95 %, without condensation
Vibration resistance	4 g acc. to EN 60068-2-6
Shock resistance	15 g acc. EN 60068-2-27

Certifications/Standards

Conformity	CE UKCA
Certifications	cULus (E135145) URus (E490188)
Standards	EN 61000-2 EN 61000-3 UL 60947-5-1

Dimensions

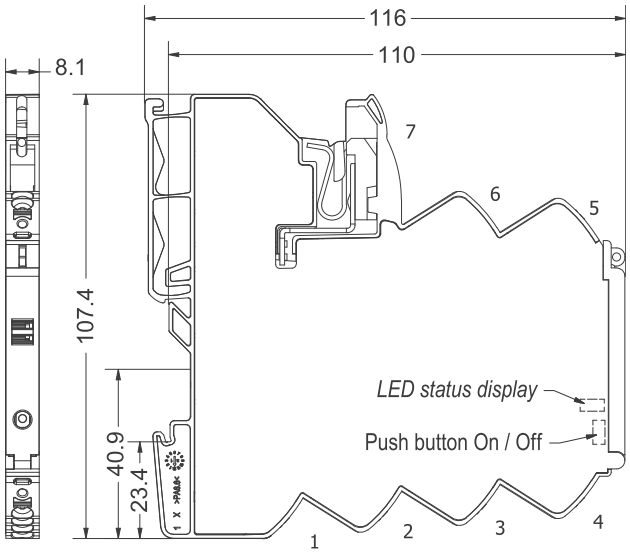

PIN assignment

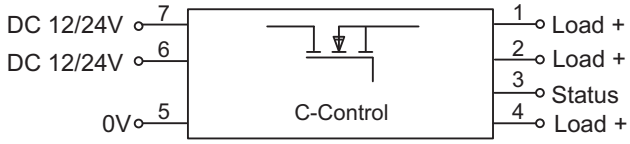

1: + Output
2: + Output
3: Status output
4: + Output
5: 0V
6: + Supply (alternative)
7: + Supply

1: Characteristic fast

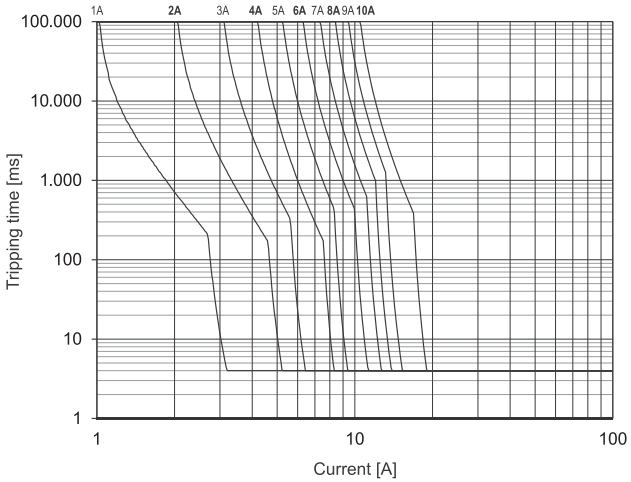

2: Characteristic medium

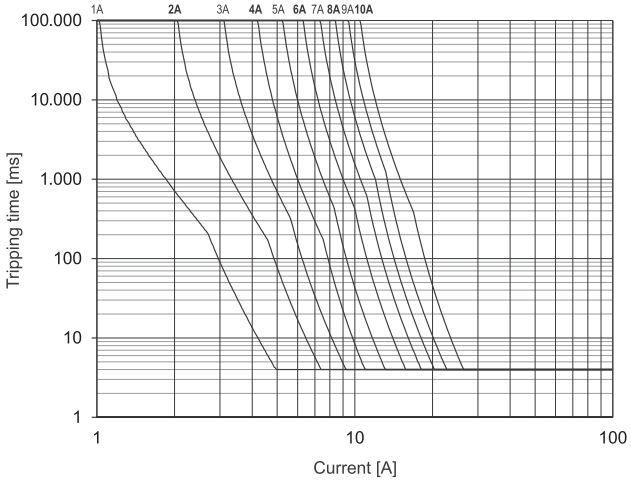

3: Characteristic slow-1

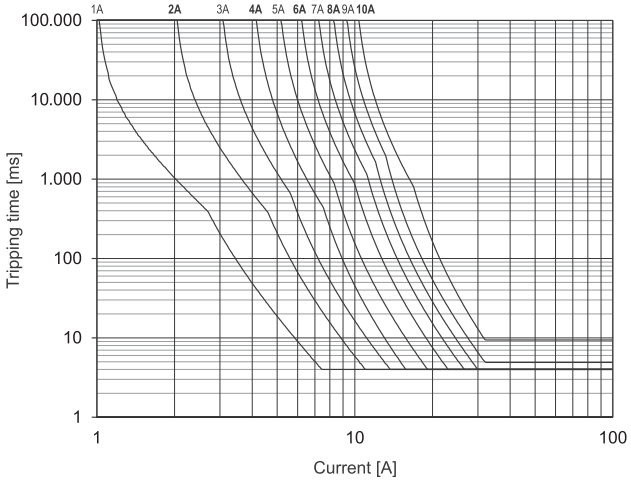

4: Characteristic slow-2

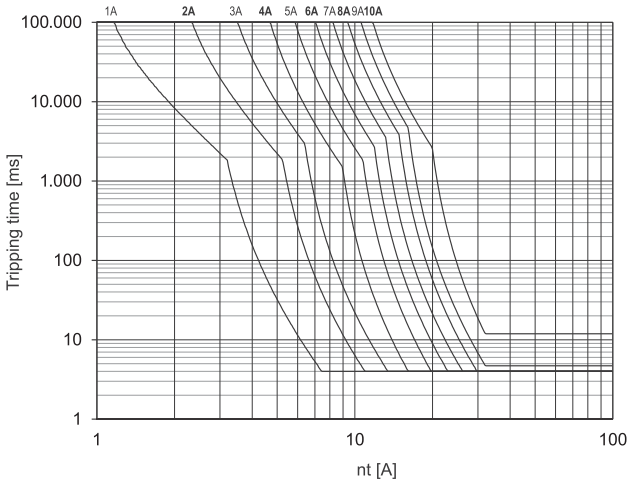

5: Characteristic slow-3

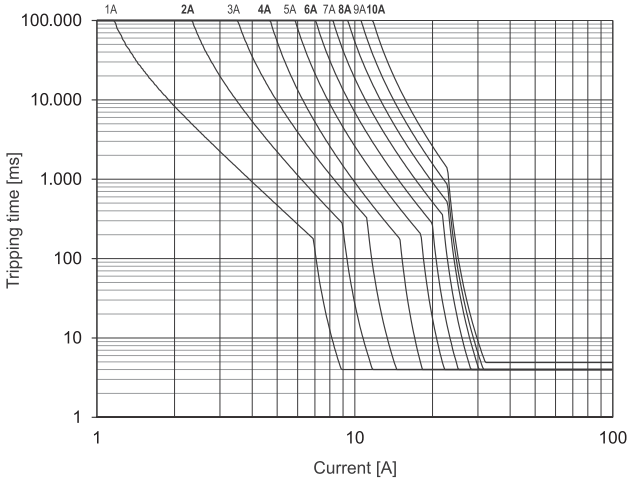

Use

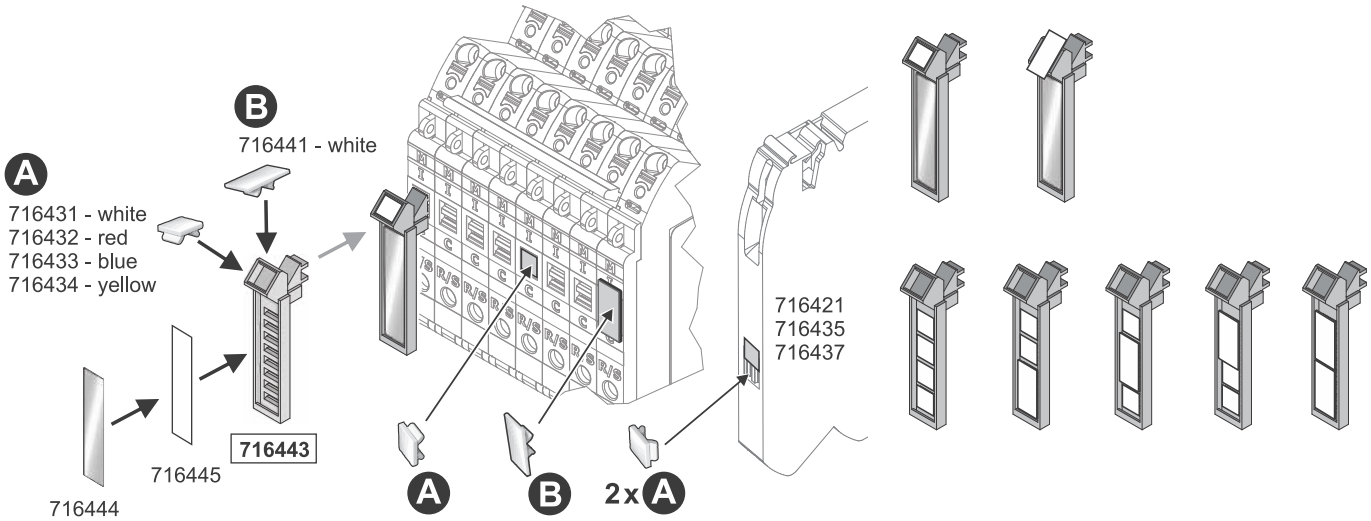

Order code

716407. 2 3 50

Type		PU	
		00	1 pc.
		50	50 pcs.

Current range		Characteristic	
1	1A	1	fast
2	2A	2	medium
3	3A	**3**	slow-1
⋮		4	slow-2
0	10A	5	slow-3

LED status

LED Status, Button, Rotary Switch

LED green	*ON*	*Function is OK**
LED green, flashing 1 Hz	*Overload*	*Load above 90 % of I nominal*
LED green, flashing 5 Hz	*Overload*	*Load above 100 % of I nominal*
LED red	*OFF*	*Module switched off or acknowledged**
LED red, flashing 1 Hz	*Overload*	*Output off due to overload/short circuit**
LED red, flashing 5 Hz	*Error*	*Wiring error – feedback (internal error)*
LED red, flashing shortly	*OFF*	*Output off via remote set/reset*
LED red/green, flashing 1 Hz	*ON*	*Target settings via rotary switch deviate from actual settings.* ***NOTICE: Switching off and on via pushbutton required.***
*Button **	*ON/OFF*	*Nominal operation: ON/OFF* *Load monitoring tripped: 1st push: acknowledge* *2nd push: ON*

** If the operating voltage is switched off, the last status is saved (Default).*

*** Master function - switch off via push button, can only be switched on again via push button*

For further information see also the operating instructions

Signal output

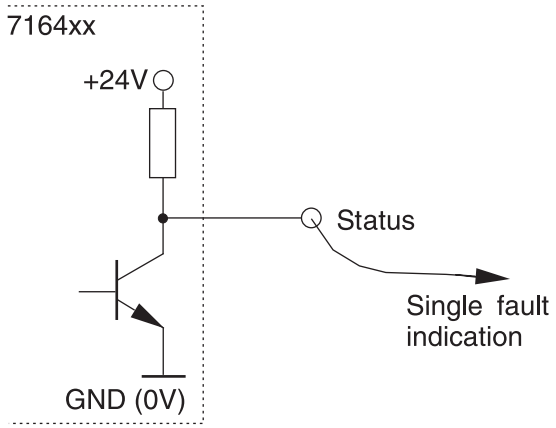

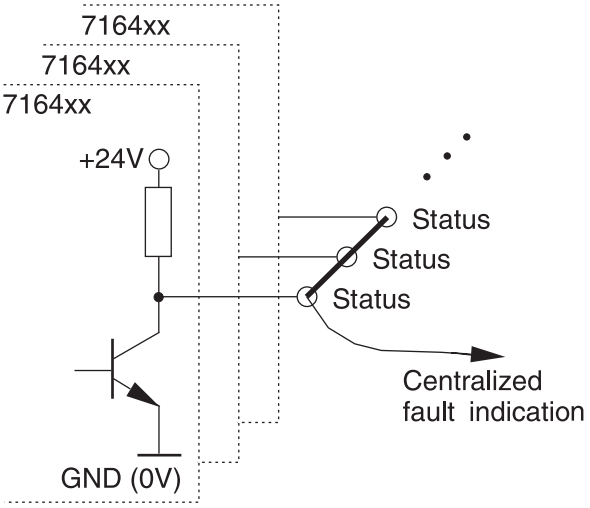

Mounting diagram

HINWEIS / NOTICE / AVIS

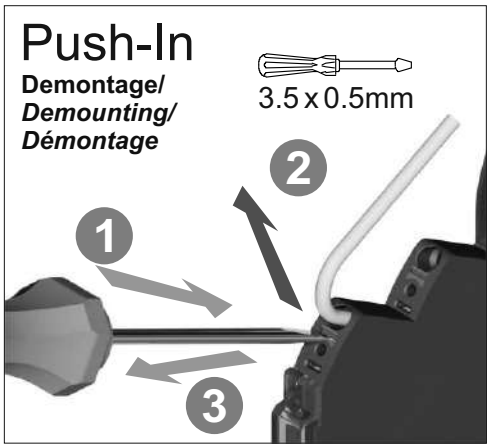

Typschlüssel

LOCC-Box - EC - I1 - C1 -xxxx

Productfamily

Variant
EC Eco

Current range
I1 1A
I2 2A
⋮
I10 10A

Characteristic
C1 fast
C2 medium
C3 slow-1
C4 slow-2
C5 slow-3

Software Parameter

Technical data sheet

Load monitoring · LOCC-Box-SC

Electronic circuit breaker rated up to DC 5 A
Single-channel design, adjustable current range: DC 1 A – 5 A
Adjustable characteristics, fast, medium-speed, slow 1

Identification

Type	LOCC-Box-SC 7-6408
Part No.	716408

Product version

Hardware revision	2.0
Software version	2.6
Datasheet version	02

Input

Type of function	1-channel 1 pin switching
Rated voltage U_N	DC 12/24 V
Operation voltage range	DC 10–30 V
Rated current I_N	DC 5 A
Supply current	DC 40 A over Cu-rails 10 × 3 mm
Reverse voltage protection	Internal electronics
Connection type input	Screwless contact slide

Control input (Set / Reset)

Signal level	DC 12/24 V acc. to EN 61131
OFF	Pulse with falling edge >100 ms, <800 ms
ON	Pulse with falling edge > 1 s

Output

Switching element	MOSFET

Output current	Max. DC 5 A
Voltage drop	Max. 90 mV (5 A)
Status display output	LED green: operating voltage present, no error LED red: error in load circuit
Switch-on capacity	10000 µF
Current range	1 A – 5 A (adjustable via switch in 1 A steps)
Characteristic	Fast (1), medium (2), slow 1 (3) see ’characteristic curves’

Signal output

Signal level	DC 12/24 V: operating voltage on standby, no error, DC 0 V: error, output switched off and manual "OFF"
Switching element	Transistor, collector with pull-up resistance

General

Dimensions (w × h × d)	8.1 mm × 107.4 mm × 116.0 mm
Housing material	PA 6.6 (UL 94 V-0, NFF I2, F2)
Mounting	DIN rail mountable TS35 (EN 60715)
Installation position	Any
MTBF	690000 h
Degree of protection	IP20 (only as complete system with power terminal and end block)
Connection type	Push-In 0.25 mm² – 2.5 mm² AWG 24 – AWG 14
Weight/unit	0.07 kg
PU (units)	1

General ambient conditions

Operation temperature range	-25 °C . . . +50 °C
Storage temperature range	-40 °C . . . +85 °C
Relative air humidity	10 % – 95 %, without condensation
Vibration resistance	4 g acc. to EN 60068-2-6
Shock resistance	15 g acc. EN 60068-2-27

Certifications/Standards

Conformity	CE UKCA
Certifications	cULus (E135145) URus (E490188)

Technical data sheet

Load monitoring · LOCC-Box-SC

Standards	EN 61000-6-2 EN 61000-6-3 UL 60947-5-1 UL 2367 DNVGL-CG-0339 Temperature Class D – not certified Humidity Class B – not certified Vibration Class B – not certified EMC Class A – not certified Enclosure Class A – not certified

Dimensions

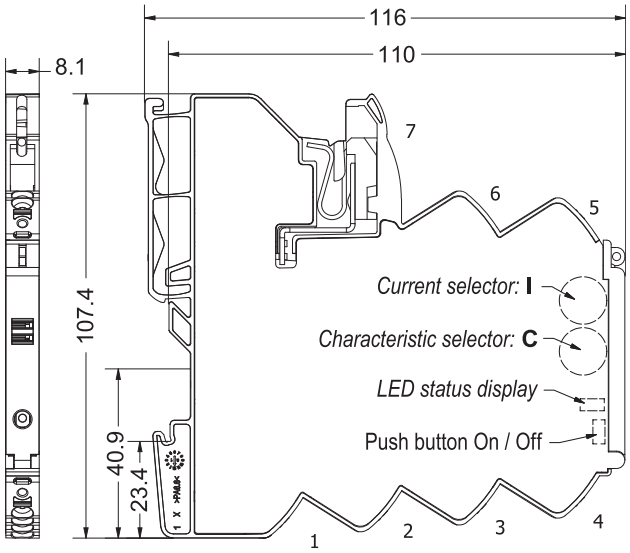

PIN assignment

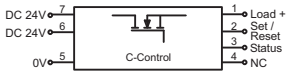

1: + Output
2: Control input (Set/Reset)
3: Status output
4: NC
5: 0V
6: + Supply (alternative)
7: + Supply

1: Characteristic fast

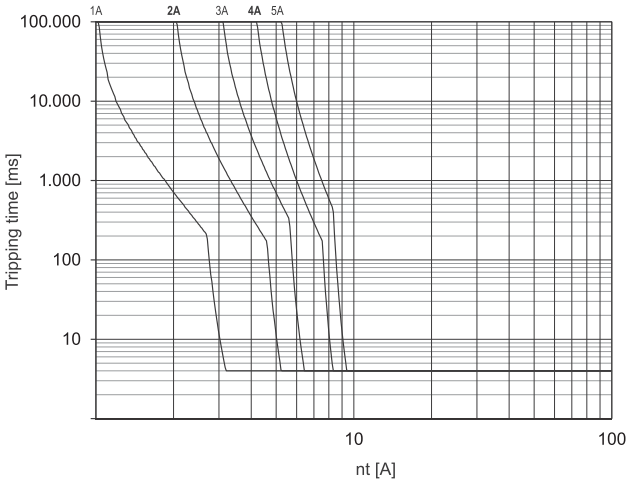

2: Characteristic medium

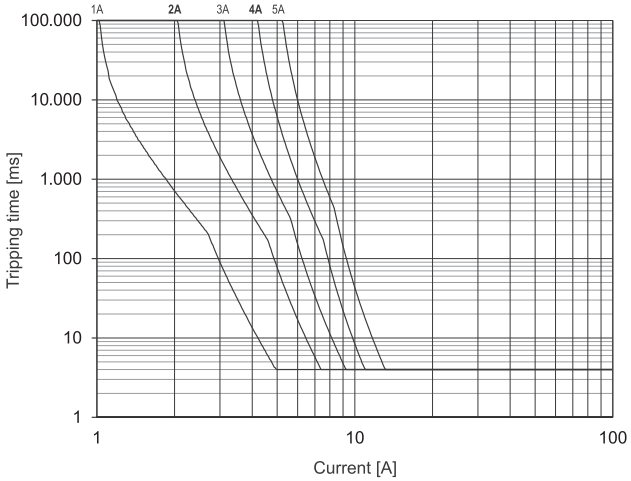

3: Characteristic slow-1

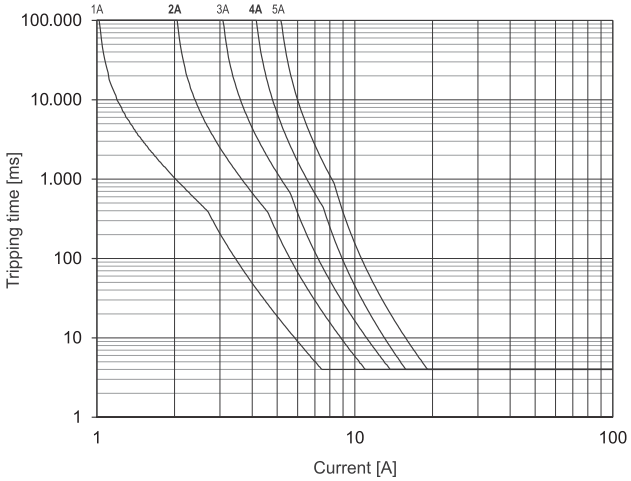

Use

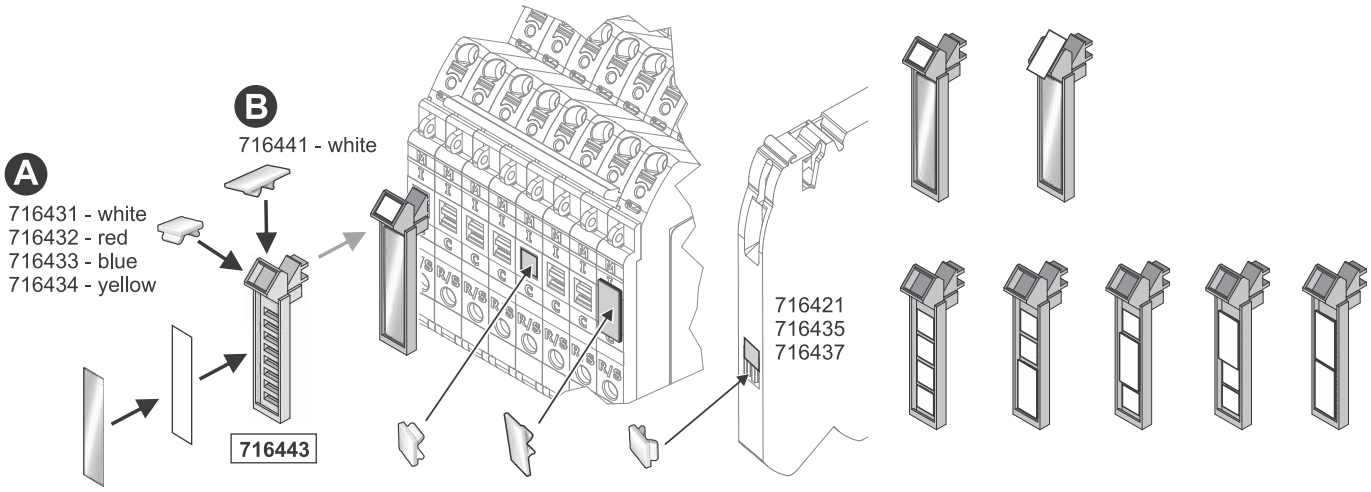

LED status

LED Status, Button, Rotary Switch

LED green	*ON*	*Function is OK**
LED green, flashing 1 Hz	*Overload*	*Load above 90 % of I nominal*
LED green, flashing 5 Hz	*Overload*	*Load above 100 % of I nominal*
LED red	*OFF*	*Module switched off or acknowledged**
LED red, flashing 1 Hz	*Overload*	*Output off due to overload/short circuit**
LED red, flashing 5 Hz	*Error*	*Wiring error – feedback (internal error)*
LED red, flashing shortly	*OFF*	*Output off via remote set/reset*
LED red/green, flashing 1 Hz	*ON*	*Target settings via rotary switch deviate from actual settings.* ***NOTICE: Switching off and on via pushbutton required.***
*Button ****	*ON/OFF*	*Nominal operation: ON/OFF* *Load monitoring tripped: 1st push: acknowledge* *2nd push: ON*
*Rotary Switch (I) – Switch Position***	*Rated current, see page 4.*	
*Rotary Switch (C) – Switch Position***	*Characteristic: 1: fast 2: middle* *3: slow-1 4: slow-2 5: slow-3*	

** If the operating voltage is switched off, the last status is saved (Default).*
*** Accept the setting - after switching on again via the button, not by Remote Set/Reset*
**** Master function - switch off via push button, can only be switched on again via push button*

For further information see also the operating instructions

Signal output

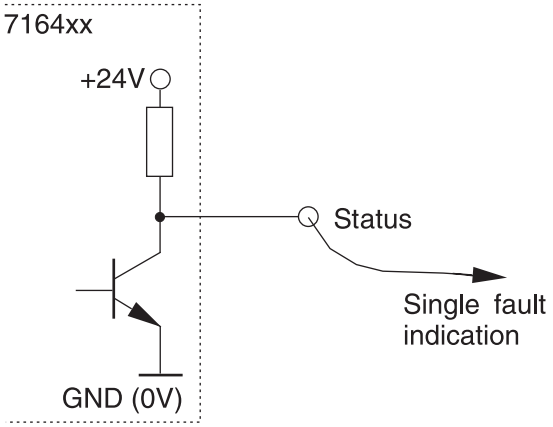

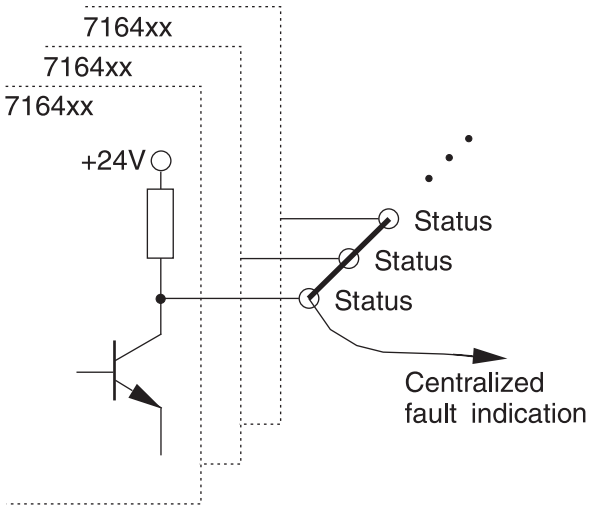

Mounting diagram

HINWEIS / NOTICE / AVIS

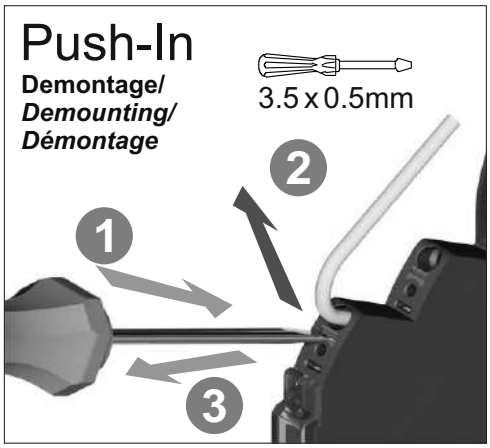

Technical data sheet

Load monitoring · LOCC-Box-FB2A

Electronic circuit breaker rated up to DC 2 A
Single-channel design, adjustable current range: DC 0.2 A – 2 A
Adjustable characteristics, fast, medium, slow

Identification

Type	LOCC-Box-FB2A 7-6409
Part No.	716409

Product version

Hardware revision	2.0
Software version	2.6
Datasheet version	04

Input

Type of function	1-channel 1 pin switching
Rated voltage U_N	DC 12/24 V
Operation voltage range	DC 10–32 V
Rated current I_N	DC 2 A
Supply current	DC 40 A over Cu-rails 10 × 3 mm
Reverse voltage protection	Internal electronics
Connection type input	Screwless contact slide

Control input (Set / Reset)

Signal level	DC 12/24 V acc. to EN 61131
OFF	Pulse with falling edge >100 ms, <800 ms
ON	Pulse with falling edge > 1 s

Output

Switching element	MOSFET

Output current	Max. DC 2 A
Voltage drop	Max. 145 mV (2 A)
Status display output	LED green: operating voltage present, no error LED red: error in load circuit
Switch-on capacity	10000 µF
Current range	0.2 A – 2 A (adjustable via switch in 0.2 A steps)
Characteristic	Fast (1), medium (2), slow 1 (3) see ’characteristic curves’
Current limitation	13.75 A

Signal output

Signal level	DC 12/24 V: operating voltage on standby, no error, DC 0 V: error, output switched off and manual "OFF"
Switching element	Transistor, collector with pull-up resistance

General

Dimensions (w × h × d)	8.1 mm × 107.4 mm × 116.0 mm
Housing material	PA 6.6 (UL 94 V-0, NFF I2, F2)
Color of the housing	Basalt grey
Mounting	DIN rail mountable TS35 (EN 60715)
Installation position	Any
MTBF	690000 h
Degree of protection	IP20 (only as complete system with supply terminal and end block)
Connection type	Push-In 0.25 mm² – 2.5 mm² AWG 24 – AWG 14
Weight/unit	0.07 kg
PU (units)	1

General ambient conditions

Operation temperature range	-25 °C … +50 °C
Storage temperature range	-40 °C … +85 °C
Relative air humidity	10 % – 95 %, without condensation
Vibration resistance	4 g acc. to EN 60068-2-6
Shock resistance	15 g acc. EN 60068-2-27

Certifications/Standards

Conformity	CE UKCA
Certifications	cULus (E135145)

Standards	EN 61000-6-2 EN 61000-6-3 UL 60947-5-1 DNVGL-CG-0339 Temperature Class D – not certified Humidity Class B – not certified Vibration Class B – not certified EMC Class A – not certified Enclosure Class A – not certified

Dimensions

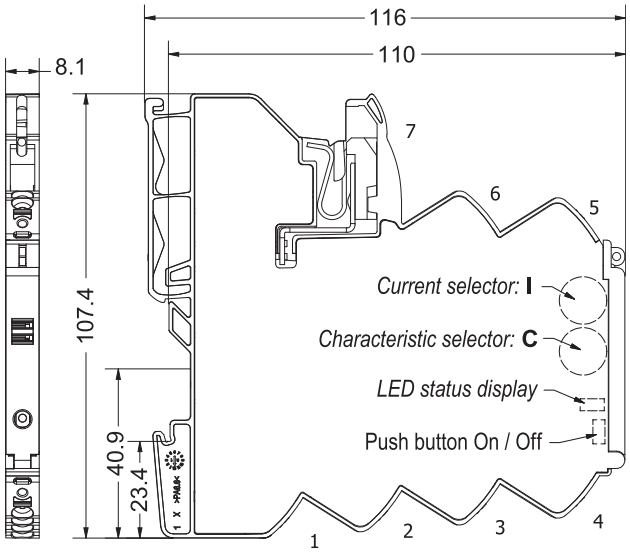

PIN assignment

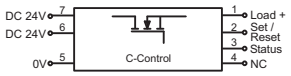

1: + Output
2: Control input (Set/Reset)
3: Status output
4: NC
5: 0V
6: + Supply (alternative)
7: + Supply

1: Characteristic fast

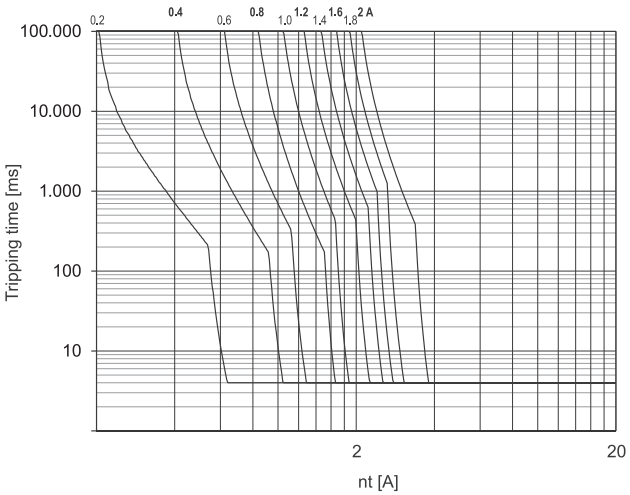

2: Characteristic medium

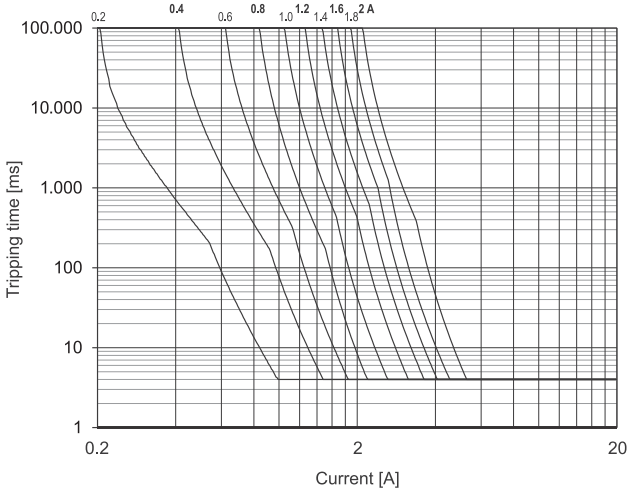

3: Characteristic slow-1

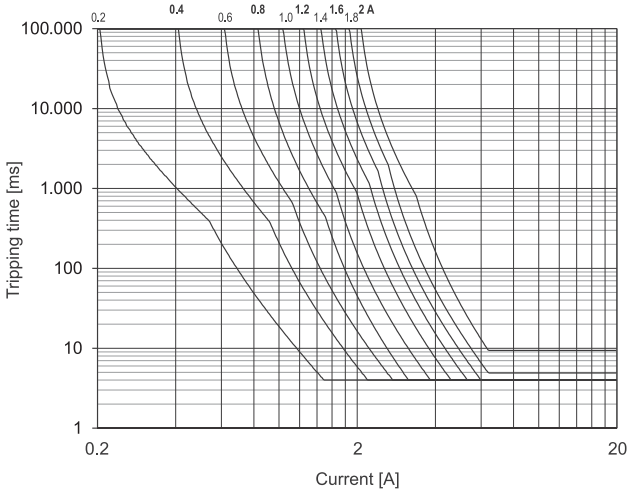

Use

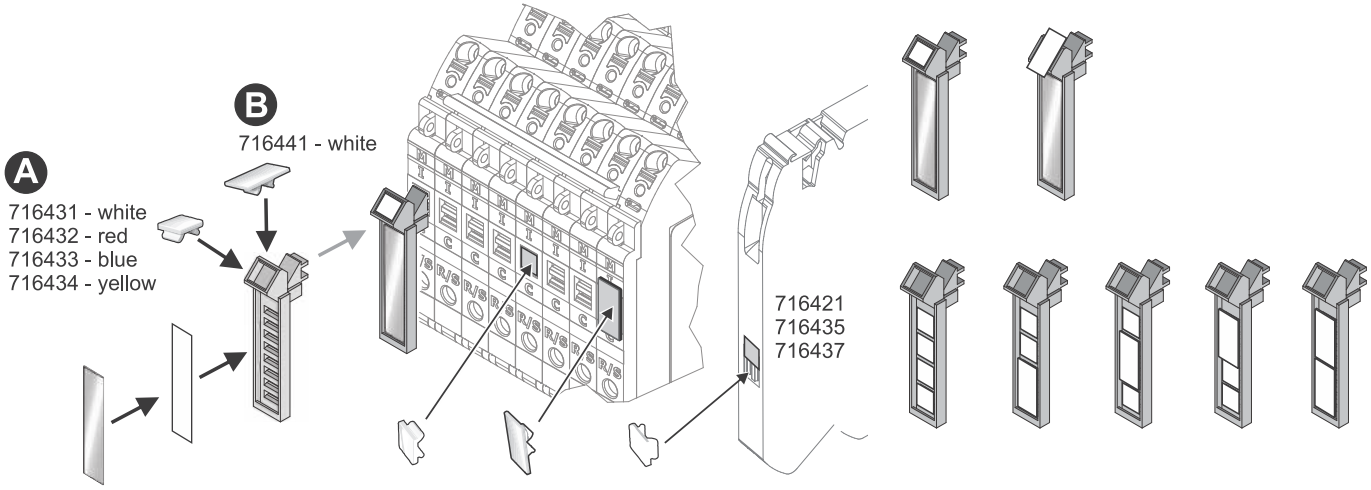

LED status

LED Status, Button, Rotary Switch

LED green	*ON*	*Function is OK**
LED green, flashing 1 Hz	*Overload*	*Load above 90 % of I nominal*
LED green, flashing 5 Hz	*Overload*	*Load above 100 % of I nominal*
LED red	*OFF*	*Module switched off or acknowledged**
LED red, flashing 1 Hz	*Overload*	*Output off due to overload/short circuit**
LED red, flashing 5 Hz	*Error*	*Wiring error – feedback (internal error)*
LED red, flashing shortly	*OFF*	*Output off via remote set/reset*
LED red/green, flashing 1 Hz	*ON*	*Target settings via rotary switch deviate from actual settings.* ***NOTICE: Switching off and on via pushbutton required.***
*Button ****	*ON/OFF*	*Nominal operation: ON/OFF* *Load monitoring tripped: 1st push: acknowledge* *2nd push: ON*
*Rotary Switch (I) – Switch Position***	*Rated current, see page 4.*	
*Rotary Switch (C) – Switch Position***	*Characteristic: 1: fast 2: middle* *3: slow-1 4: slow-2 5: slow-3*	

** If the operating voltage is switched off, the last status is saved (Default).*
*** Accept the setting - after switching on again via the button, not by Remote Set/Reset*
**** Master function - switch off via push button, can only be switched on again via push button*

For further information see also the operating instructions

Signal output

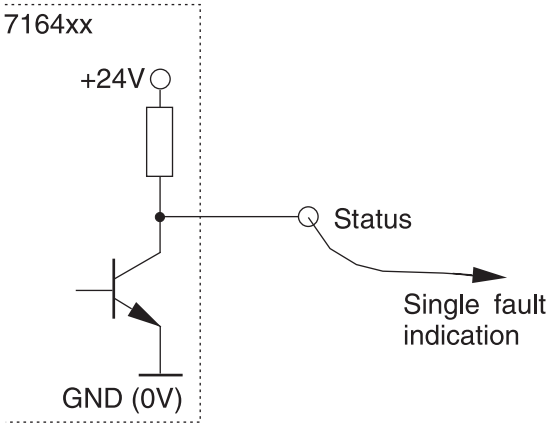

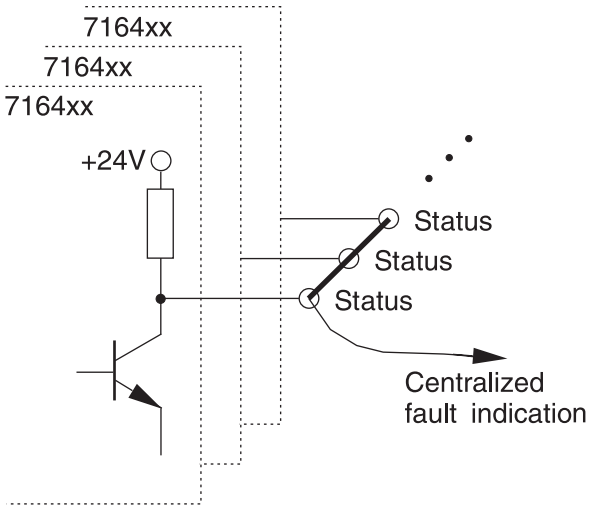

Mounting diagram

HINWEIS / NOTICE / AVIS

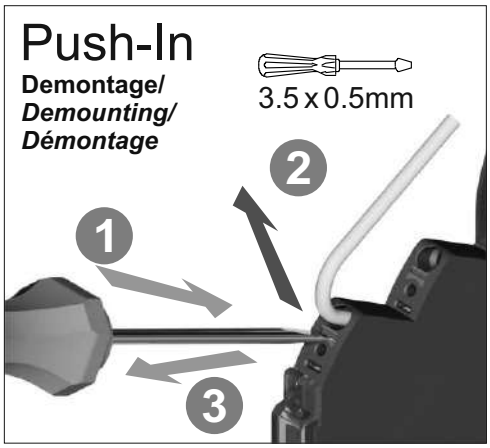

Technical data sheet

Load monitoring · LOCC-Box-Net

Electronic circuit breaker rated up to DC 10 A, with communication
Single-channel design, programmable, adjustable current range: DC 1 A – 10 A
Adjustable characteristics, fast, medium, slow 1, -2, -3

Identification

Type	LOCC-Box-Net 7-6410
Part No.	716410

Product version

Hardware revision	2.0
Software version	2.6
Datasheet version	05

Input

Type of function	1-channel 1 pin switching
Rated voltage U_N	DC 12/24 V
Operation voltage range	DC 10–30 V
Rated current I_N	DC 10 A
Supply current	DC 40 A over Cu-rails 10 × 3 mm
Reverse voltage protection	Internal electronics
Connection type input	Screwless contact slide

Control input (Set / Reset)

Signal level	DC 12/24 V acc. to IEC 61131-2
OFF	Pulse with falling edge >100 ms, <800 ms
ON	Pulse with falling edge > 1 s

Output

Switching element	MOSFET

Output current	Max. DC 10 A
Voltage drop	Max. 215 mV (10 A)
Status display output	LED green: operating voltage present, no error LED red: error in load circuit
Switch-on capacity	10000 µF
Current range	1 A – 10 A (adjustable via switch in 1 A steps)
Characteristic	Fast (1), medium (2), slow 1 (3), slow 2 (4), slow 3 (5), can be configured (19) see ’characteristic curves’

Signal output

Signal level	DC 12/24 V: operating voltage on standby, no error, DC 0 V: error, output switched off or manual "OFF"
Switching element	Transistor, collector with pull-up resistance

General

Dimensions (w × h × d)	8.1 mm × 107.4 mm × 116.0 mm
Housing material	PA 6.6 (UL 94 V-0, NFF I2, F2)
Color of the housing	Basalt grey
Mounting	DIN rail mountable TS35 (EN 60715)
Installation position	Any
MTBF	690000 h
Degree of protection	IP20 (only as complete system with supply terminal and end block)
Connection type	Push-In 0.25 mm² – 2.5 mm² AWG 24 – AWG 14
Weight/unit	0.07 kg
PU (units)	1

General ambient conditions

Operation temperature range	-25 °C . . . +50 °C
Storage temperature range	-40 °C . . . +85 °C
Relative air humidity	10 % – 95 %, without condensation
Vibration resistance	4 g acc. to EN 60068-2-6
Shock resistance	15 g acc. EN 60068-2-27

Certifications/Standards

Conformity	CE UKCA
Certifications	cULus (E135145) URus (E490188)

Dimensions

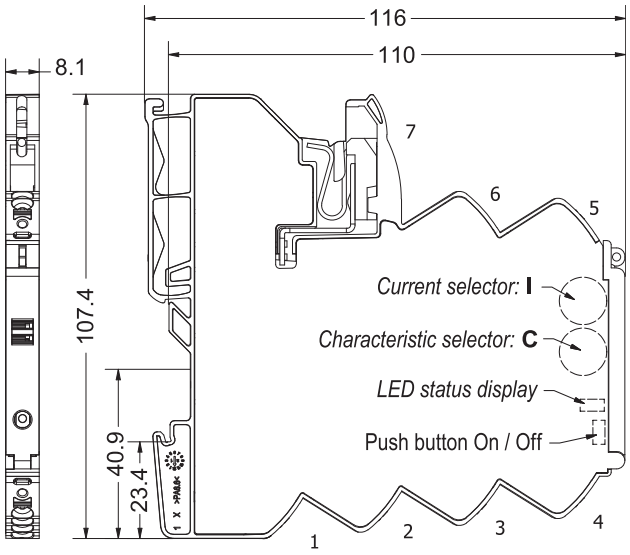

PIN assignment

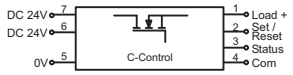

1: + Output
2: Control input (Set/Reset)
3: Status output
4: 1 Wire bus (Communication)
5: 0V
6: + Supply (alternative)
7: + Supply

1: Characteristic fast

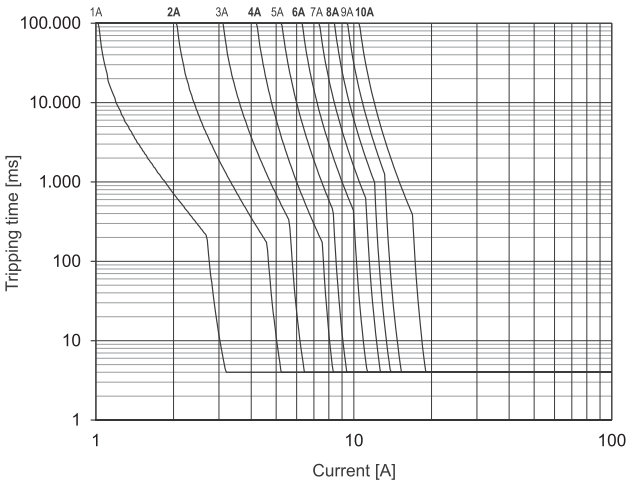

2: Characteristic medium

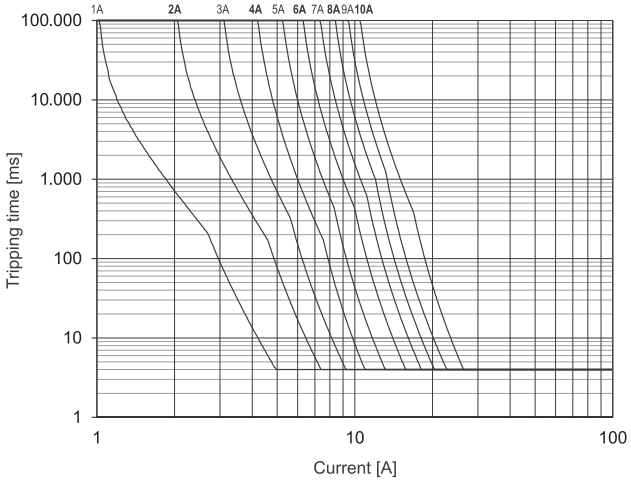

3: Characteristic slow-1

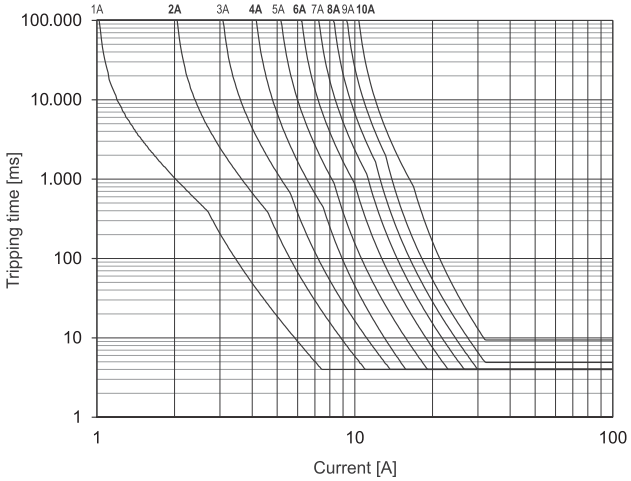

4: Characteristic slow-2

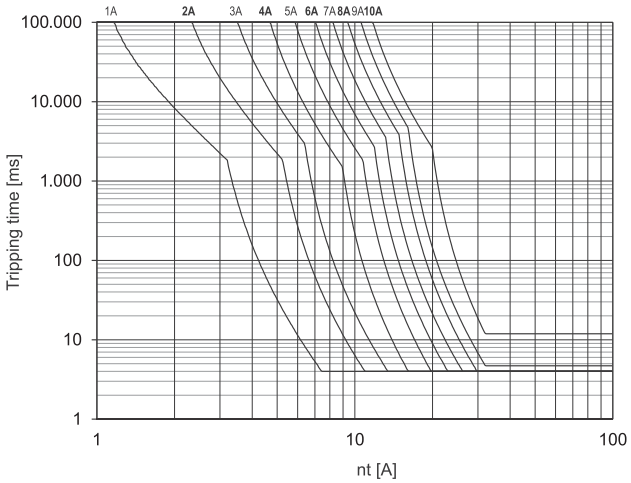

5: Characteristic slow-3

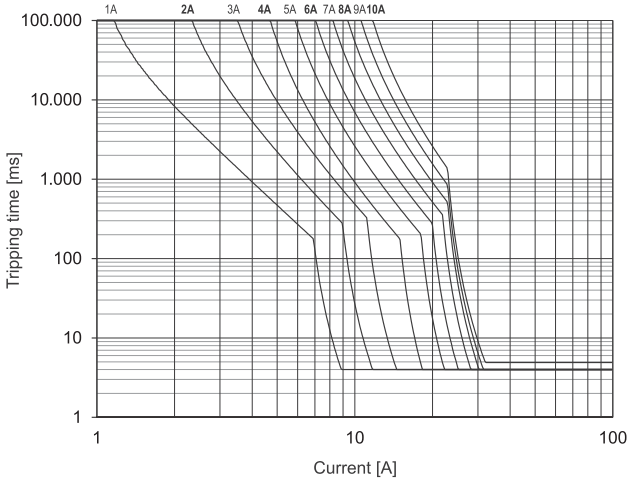

Use

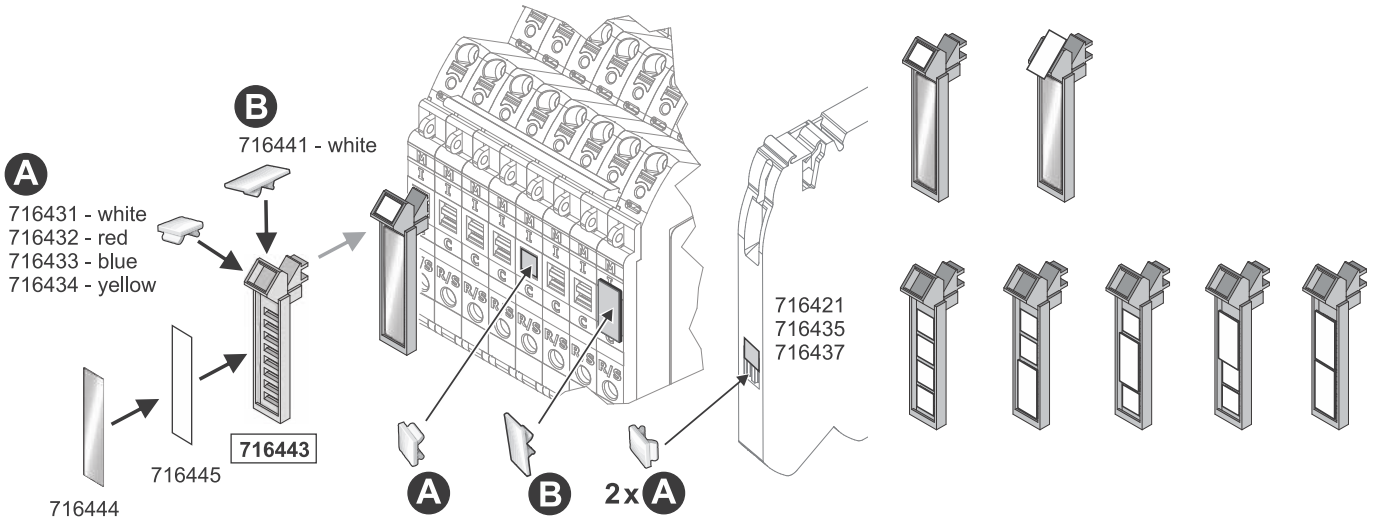

LED status

LED Status, Button, Rotary Switch

LED green	*ON*	*Function is OK**
LED green, flashing 1 Hz	*Overload*	*Load above 90 % of I nominal*
LED green, flashing 5 Hz	*Overload*	*Load above 100 % of I nominal*
LED red	*OFF*	*Module switched off or acknowledged**
LED red, flashing 1 Hz	*Overload*	*Output off due to overload/short circuit**
LED red, flashing 5 Hz	*Error*	*Wiring error – feedback (internal error)*
LED red, flashing shortly	*OFF*	*Output off via remote set/reset*
LED red/green, flashing 1 Hz	*ON*	*Target settings via rotary switch deviate from actual settings.* ***NOTICE: Switching off and on via pushbutton required.***
*Button ****	*ON/OFF*	*Nominal operation: ON/OFF* *Load monitoring tripped: 1st push: acknowledge* *2nd push: ON*
*Rotary Switch (I) – Switch Position***	*Rated current, see page 4.*	
*Rotary Switch (C) – Switch Position***	*Characteristic: 1: fast 2: middle* *3: slow-1 4: slow-2 5: slow-3*	

** If the operating voltage is switched off, the last status is saved (Default).*
button, not by Remote Set/Reset
nly be switched on

ructions

Signal output

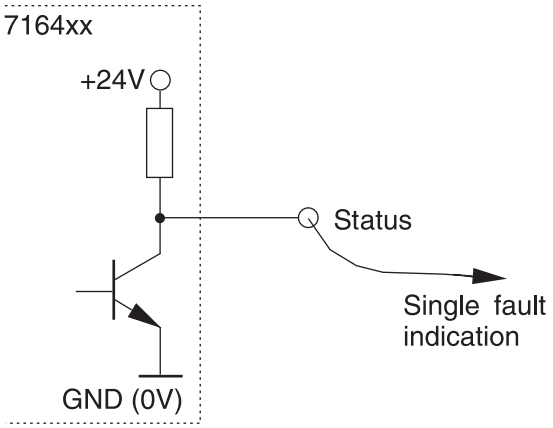

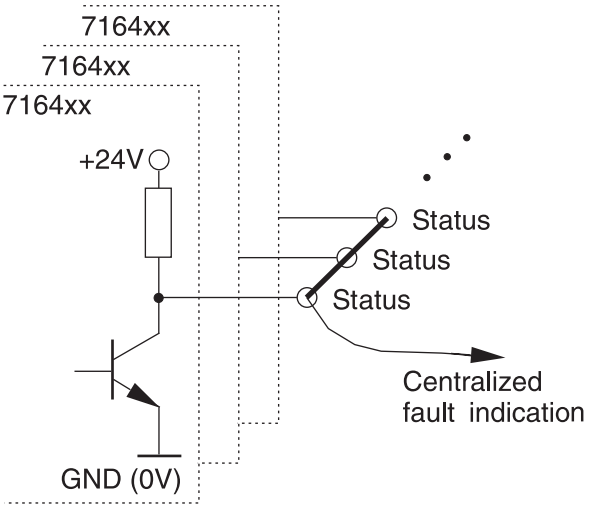

Mounting diagram

HINWEIS / NOTICE / AVIS

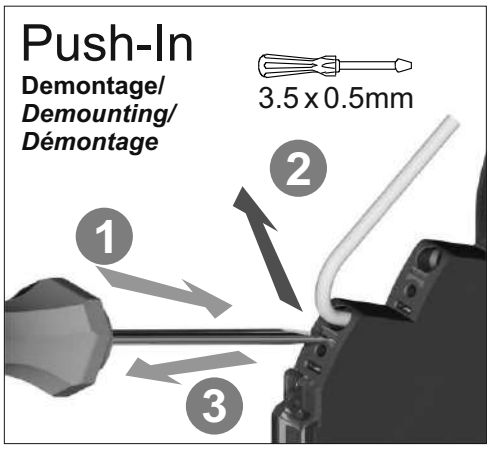

Technical data sheet

Load monitoring · LOCC-Box-Net

Electronic load monitoring up to DC 10 A, with communication
Single-channel design, programmable, Adjustable current range: DC 1 A – 10 A
Adjustable characteristics, fast, medium, slow 1, -2, -3

Identification

Type	LOCC-Box-Net 7-6410
Part No.	716410.0050

Product version

Hardware revision	2.0
Software version	2.6
Datasheet version	05

Input

Type of function	1-channel 1 pin switching
Rated voltage U_N	DC 12/24 V
Operation voltage range	DC 10–30 V
Rated current I_N	DC 10 A
Supply current	DC 40 A over Cu-rails 10 × 3 mm
Reverse voltage protection	Internal electronics
Connection type input	Screwless contact slide

Control input (Set / Reset)

Signal level	DC 12/24 V acc. to IEC 61131-2
OFF	Pulse with falling edge >100 ms, <800 ms
ON	Pulse with falling edge > 1 s

Output

Switching element	MOSFET

Output current	Max. DC 10 A
Voltage drop	Max. 215 mV (10 A)
Status display output	LED green: operating voltage present, no error LED red: error in load circuit
Switch-on capacity	10000 µF
Current range	1 A – 10 A (adjustable via switch in 1 A steps)
Characteristic	Fast (1), medium (2), slow 1 (3), slow 2 (4), slow 3 (5), can be configured (19) see ’characteristic curves’

Signal output

Signal level	DC 12/24 V: operating voltage on standby, no error, DC 0 V: error, output switched off or manual "OFF"
Switching element	Transistor, collector with pull-up resistance

General

Dimensions (w × h × d)	8.1 mm × 107.4 mm × 116.0 mm
Housing material	PA 6.6 (UL 94 V-0, NFF I2, F2)
Color of the housing	Basalt grey
Mounting	DIN rail mountable TS35 (EN 60715)
Installation position	Any
MTBF	690000 h
Degree of protection	IP20 (only as complete system with supply terminal and end block)
Connection type	Push-In 0.25 mm² – 2.5 mm² AWG 24 – AWG 14
Weight/unit	0.07 kg
PU (units)	50

General ambient conditions

Operation temperature range	-25 °C . . . +50 °C
Storage temperature range	-40 °C . . . +85 °C
Relative air humidity	10 – 95 % RH, brief condensation
Vibration resistance	4 g acc. to EN 60068-2-6
Shock resistance	15 g 11 ms acc. to IEC 60068-2-27

Certifications/Standards

Conformity	CE UKCA
Certifications	cULus (E135145) URus (E490188)

Dimensions

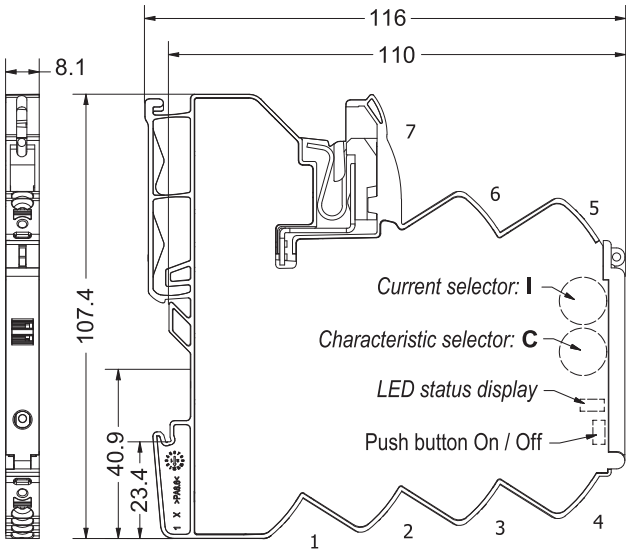

PIN assignment

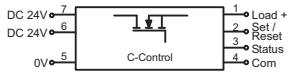

1: + Output
2: Control input (Set/Reset)
3: Status output
4: 1 Wire bus (Communication)
5: 0V
6: + Supply (alternative)
7: + Supply

1: Characteristic fast

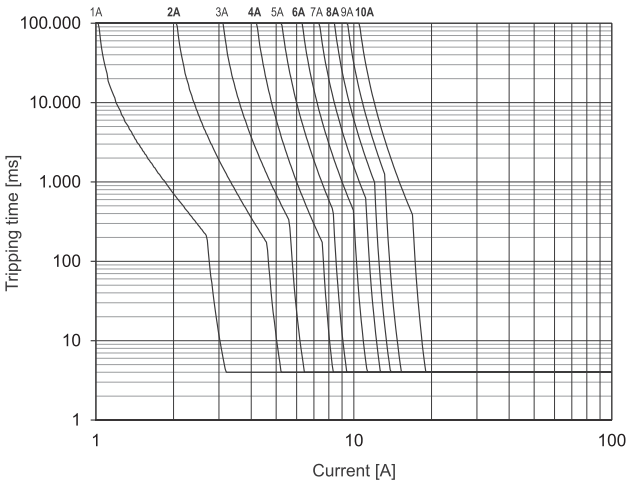

2: Characteristic medium

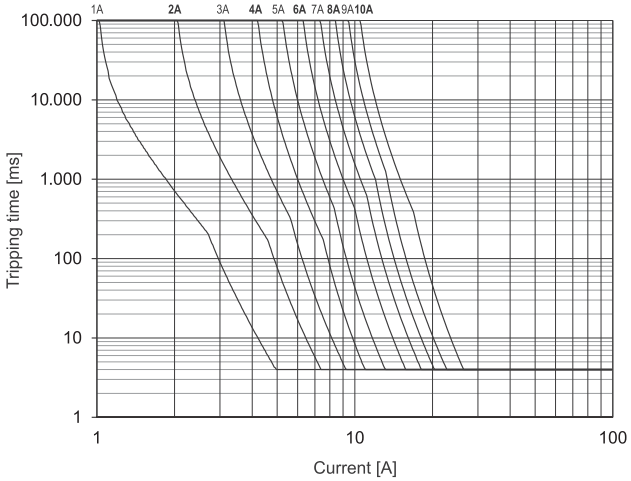

3: Characteristic slow-1

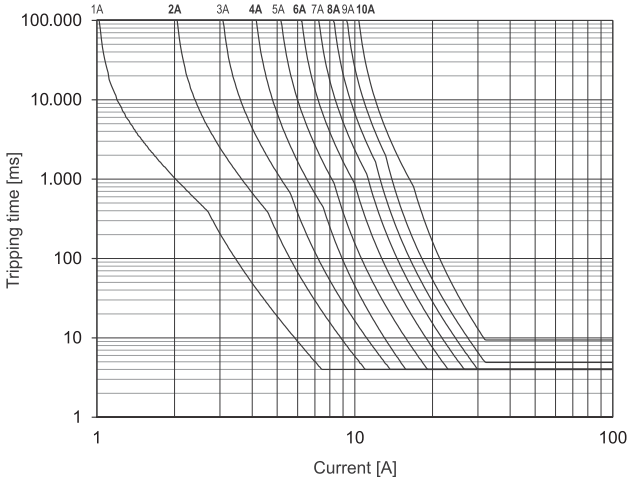

4: Characteristic slow-2

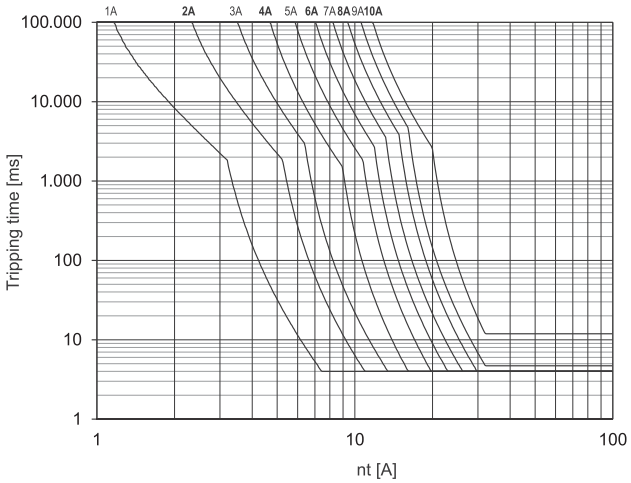

5: Characteristic slow-3

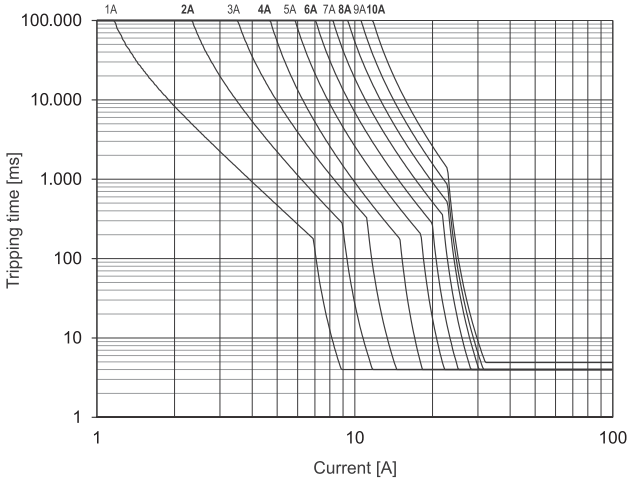

Use

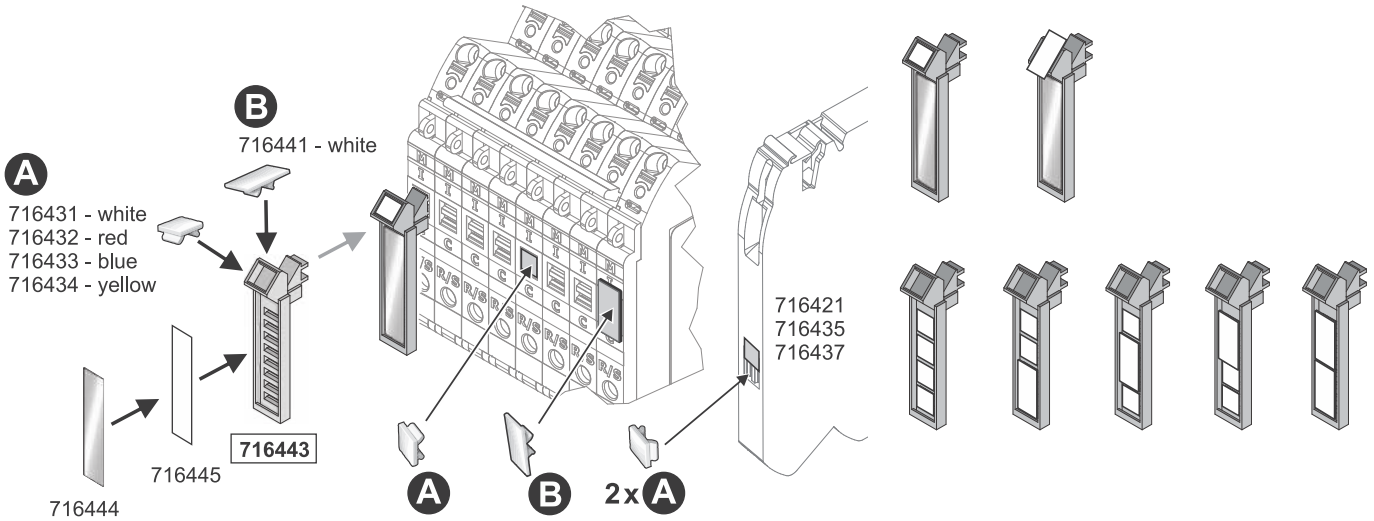

LED status

LED Status, Button, Rotary Switch

LED green	*ON*	*Function is OK**
LED green, flashing 1 Hz	*Overload*	*Load above 90 % of I nominal*
LED green, flashing 5 Hz	*Overload*	*Load above 100 % of I nominal*
LED red	*OFF*	*Module switched off or acknowledged**
LED red, flashing 1 Hz	*Overload*	*Output off due to overload/short circuit**
LED red, flashing 5 Hz	*Error*	*Wiring error – feedback (internal error)*
LED red, flashing shortly	*OFF*	*Output off via remote set/reset*
LED red/green, flashing 1 Hz	*ON*	*Target settings via rotary switch deviate from actual settings.* ***NOTICE: Switching off and on via pushbutton required.***
*Button ****	*ON/OFF*	*Nominal operation: ON/OFF* *Load monitoring tripped: 1st push: acknowledge* *2nd push: ON*
*Rotary Switch (I) – Switch Position***	*Rated current, see page 4.*	
*Rotary Switch (C) – Switch Position***	*Characteristic: 1: fast 2: middle* *3: slow-1 4: slow-2 5: slow-3*	

** If the operating voltage is switched off, the last status is saved (Default).*
button, not by Remote Set/Reset
nly be switched on

ructions

Signal output

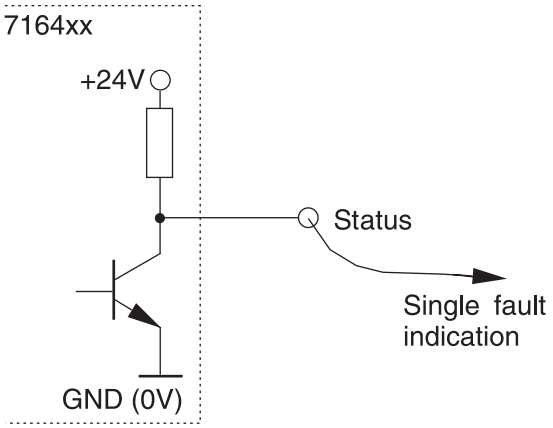

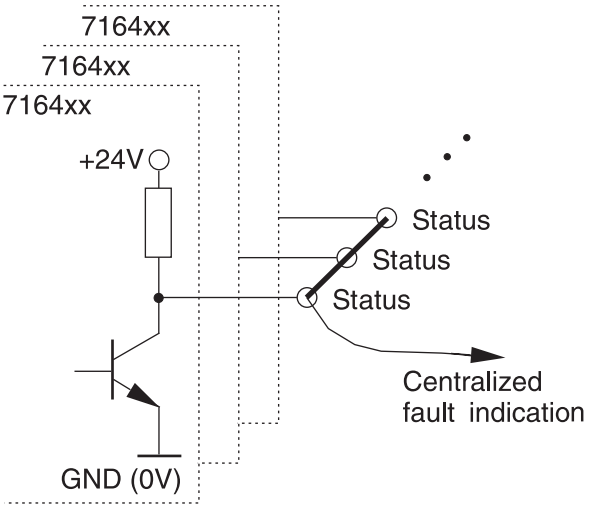

Mounting diagram

HINWEIS / NOTICE / AVIS

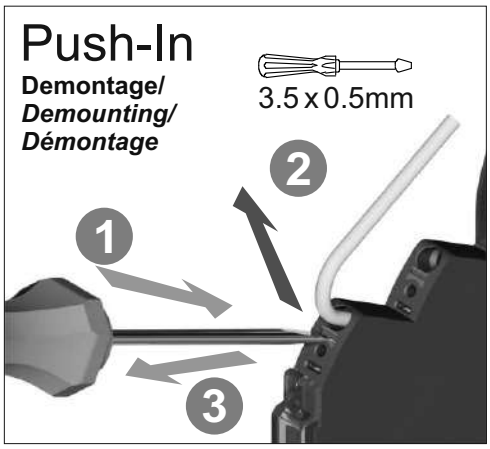

Technical data sheet

Load monitoring · LOCC-Box-Net

Electronic circuit breaker rated up to DC 10 A, with communication, without rotary switch
Single-channel design, adjustable current range: DC 1 A – 10 A
Adjustable characteristic: fast, medium, slow 1, -2, -3

Identification

Type	LOCC-Box-Net 7-6411
Part No.	716411

Product version

Hardware revision	2.0
Software version	2.6
Datasheet version	03

Input

Type of function	1-channel 1 pin switching
Rated voltage U_N	DC 12/24 V
Operation voltage range	DC 10–32 V
Rated current I_N	DC 10 A
Supply current	DC 40 A over Cu-rails 10 × 3 mm
Reverse voltage protection	Internal electronics
Connection type input	Screwless contact slide

Control input (Set / Reset)

Signal level	DC 12/24 V acc. to IEC 61131-2
OFF	Pulse with falling edge >100 ms, <800 ms
ON	Pulse with falling edge > 1 s

Output

Switching element	MOSFET

Output current	Max. DC 10 A
Voltage drop	Max. 215 mV (10 A)
Status display output	LED green: operating voltage present, no error LED red: error in load circuit
Switch-on capacity	10000 µF
Current range	1 A – 10 A (adjustable via software, EtherCAT, Profibus, CANopen)
Characteristic	Fast (1), medium (2), slow 1 (3), slow 2 (4), slow 3 (5), (adjustable via software, EtherCAT, Profibus, CANopen), see ’characteristic curves’

Signal output

Signal level	DC 12/24 V: operating voltage on standby, no error, DC 0 V: error, output switched off, and manual "OFF" (parameterized)
Switching element	Transistor, collector with pull-up resistance

General

Dimensions (w × h × d)	8.1 mm × 107.4 mm × 116.0 mm
Housing material	PA 6.6 (UL 94 V-0, NFF I2, F2)
Color of the housing	Basalt grey
Mounting	DIN rail mountable TS35 (EN 60715)
Installation position	Any
MTBF	690000 h
Degree of protection	IP20 (only as complete system with supply terminal and end block)
Connection type	Push-In 0.25 mm² – 2.5 mm² AWG 24 – AWG 14
Weight/unit	0.07 kg
PU (units)	1

General ambient conditions

Operation temperature range	-25 °C . . . +50 °C
Storage temperature range	-40 °C . . . +85 °C
Relative air humidity	10 % – 95 %, without condensation
Vibration resistance	4 g acc. to EN 60068-2-6
Shock resistance	15 g acc. EN 60068-2-27

Certifications/Standards

Conformity	CE UKCA
Certifications	cULus (E135145) URus (E490188)

Standards	EN 61000-6-2 EN 61000-6-3 UL 60947-5-1 UL 2367 DNVGL-CG-0339 Temperature Class D – not certified Humidity Class B – not certified Vibration Class B – not certified EMC Class A – not certified Enclosure Class A – not certified

Dimensions

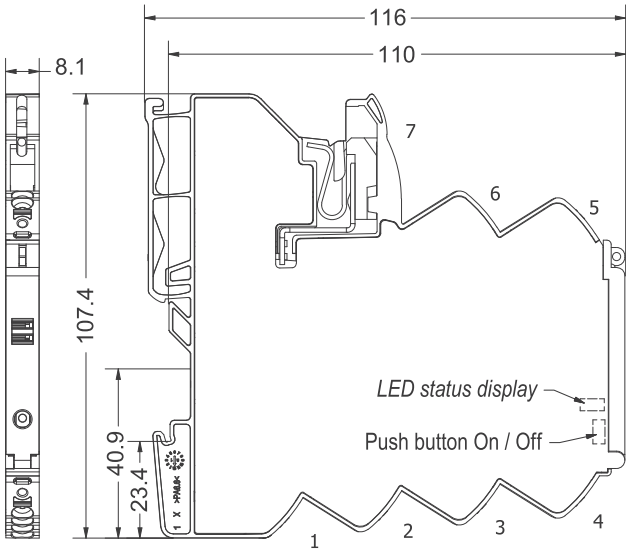

PIN assignment

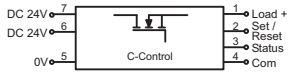

1: + Output
2: Control input (Set/Reset)
3: Status output
4: 1 Wire bus (Communication)
5: 0V
6: + Supply (alternative)
7: + Supply

1: Characteristic fast

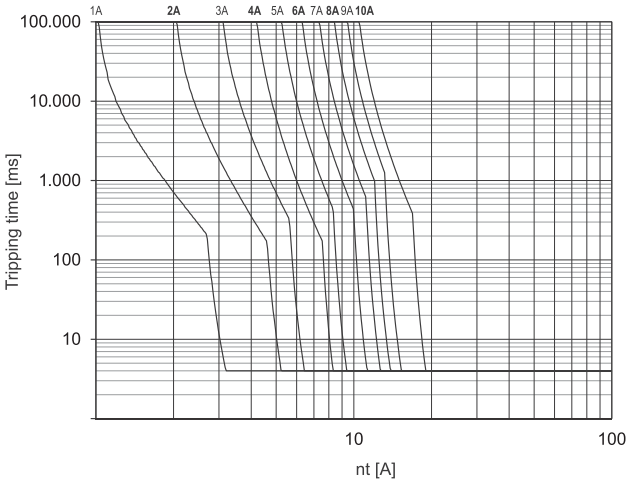

2: Characteristic medium

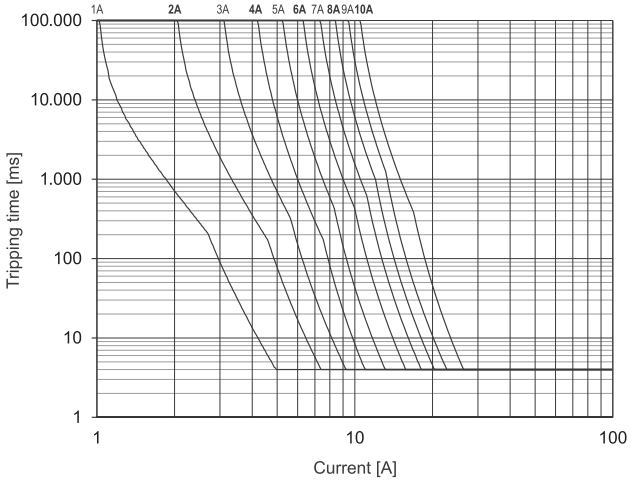

3: Characteristic slow-1

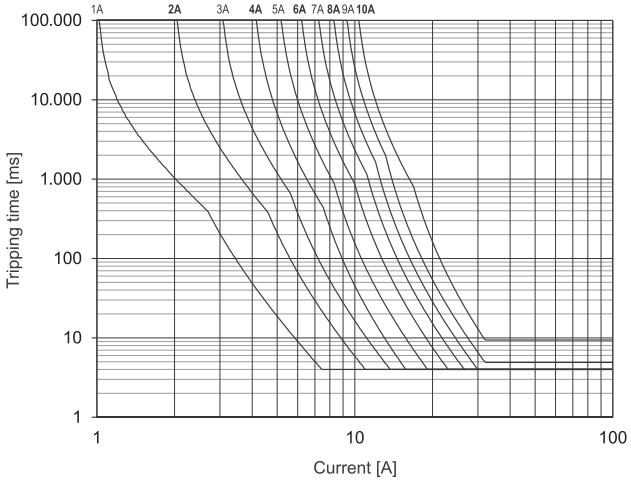

4: Characteristic slow-2

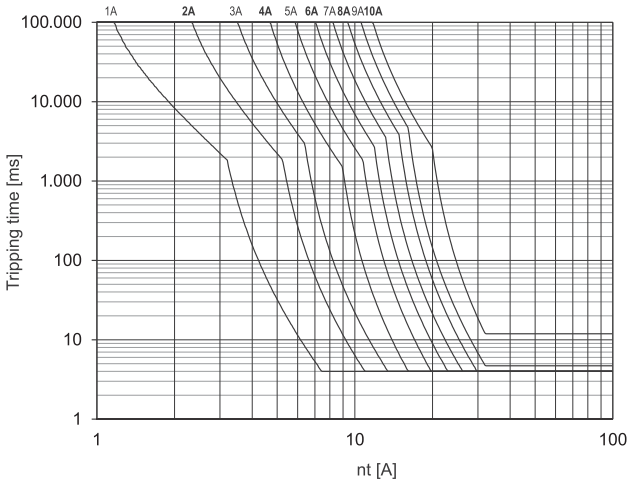

5: Characteristic slow-3

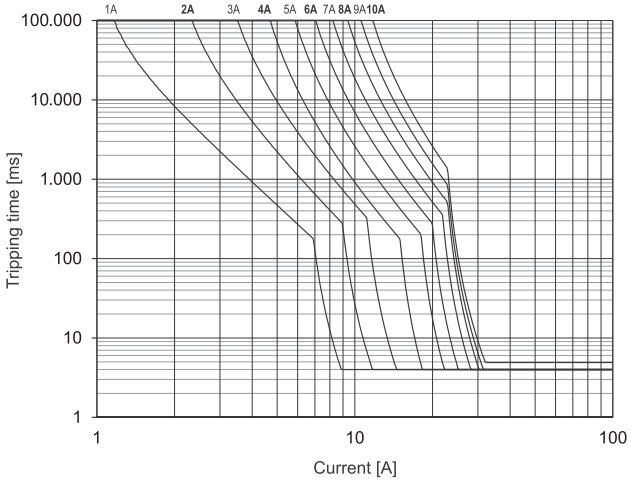

Use

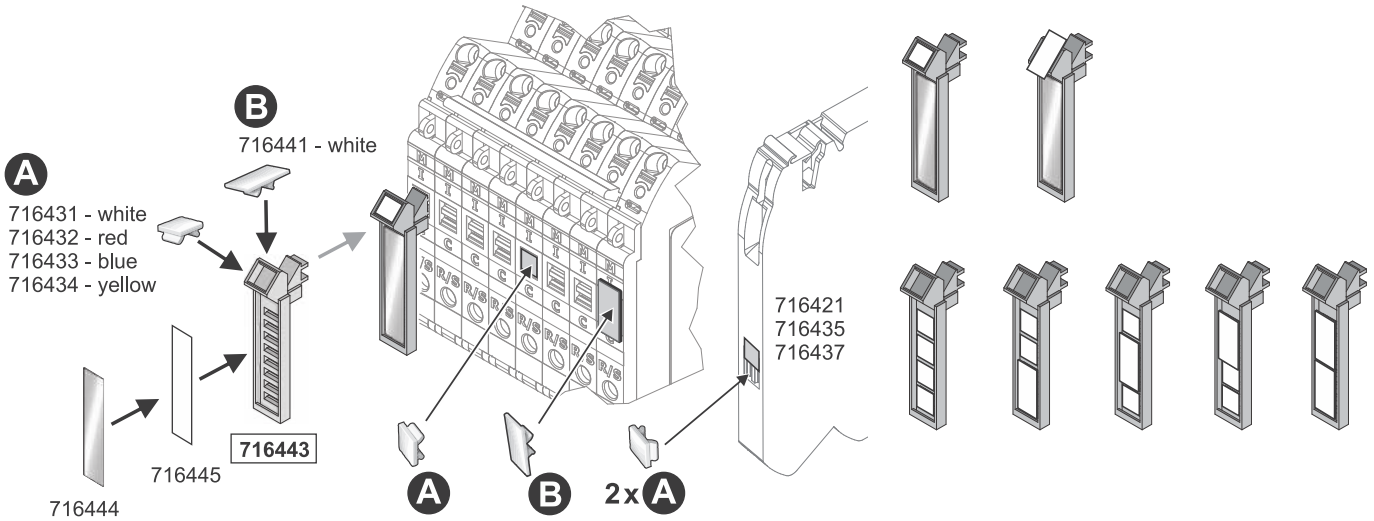

LED status

LED Status, Button, Rotary Switch

LED green	*ON*	*Function is OK**
LED green, flashing 1 Hz	*Overload*	*Load above 90 % of I nominal*
LED green, flashing 5 Hz	*Overload*	*Load above 100 % of I nominal*
LED red	*OFF*	*Module switched off or acknowledged**
LED red, flashing 1 Hz	*Overload*	*Output off due to overload/short circuit**
LED red, flashing 5 Hz	*Error*	*Wiring error – feedback (internal error)*
LED red, flashing shortly	*OFF*	*Output off via remote set/reset*
LED red/green, flashing 1 Hz	*ON*	*Target settings via rotary switch deviate from actual settings.* ***NOTICE: Switching off and on via pushbutton required.***
*Button ***	*ON/OFF*	*Nominal operation: ON/OFF* *Load monitoring tripped: 1st push: acknowledge* *2nd push: ON*

** If the operating voltage is switched off, the last status is saved (Default).*

*** Master function - switch off via push button, can only be switched on again via push button*

ructions

Signal output

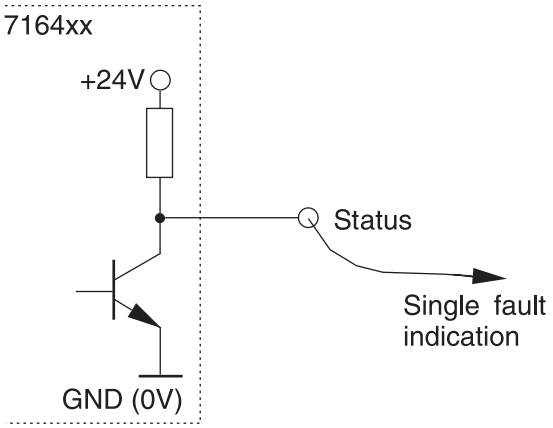

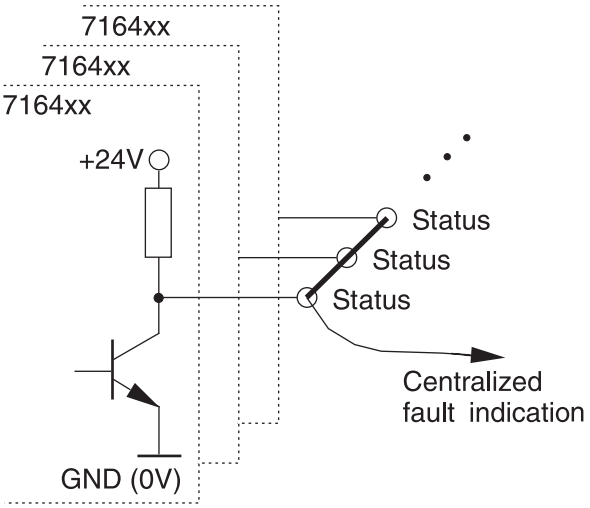

Mounting diagram

HINWEIS / NOTICE / AVIS

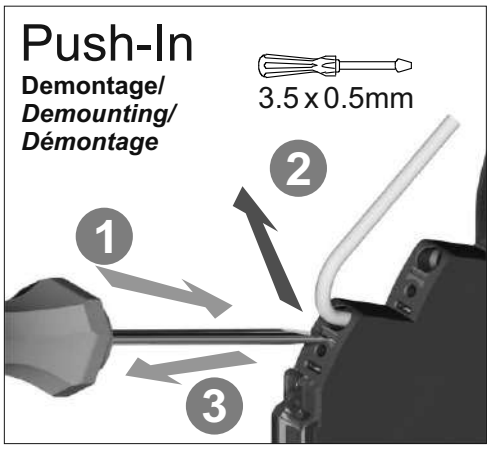

Technical data sheet

Load monitoring · LOCC-Box-EC

Electronic circuit breaker rated up to DC 10 A
Single-channel design, adjustable current range: DC 1 A – 10 A
Fixed characteristic: medium

Identification

Type	LOCC-BOX-EC I-C2
Part No.	716412.0200

Product version

Hardware revision	2.0
Software version	2.6
Datasheet version	00

Input

Type of function	1-channel 1 pin switching
Rated voltage U_N	DC 12/24 V
Operation voltage range	DC 10–30 V
Rated current I_N	DC 10 A
Supply current	DC 40 A over Cu-rails 10 × 3 mm
Reverse voltage protection	Internal electronics
Connection type input	Screwless contact slide

Control input (Set / Reset)

Signal level	DC 12/24 V acc. to IEC 61131-2

Output

Switching element	MOSFET
Output current	Max. DC 10 A
Voltage drop	Max. 215 mV (10 A)

Status display output	LED green: operating voltage present, no error LED red: error in load circuit
Switch-on capacity	10000 µF
Current range	1 A – 10 A (adjustable via switch in 1 A steps)
Characteristic	2 (medium)

Signal output

Signal level	DC 12/24 V: operating voltage on standby, no error, DC 0 V: error, output switched off and manual "OFF"
Switching element	Transistor, collector with pull-up resistance

General

Dimensions (w × h × d)	8.1 mm × 107.4 mm × 116.0 mm
Housing material	PA 6.6 (UL 94 V-0, NFF I2, F2)
Mounting	DIN rail mountable TS35 (EN 60715)
Installation position	Any
MTBF	690000 h
Degree of protection	IP20 (only as complete system with supply terminal and end block)
Connection type	Push-In 0.25 mm² – 2.5 mm² AWG 24 – AWG 14
Weight/unit	0.07 kg
PU (units)	1

General ambient conditions

Operation temperature range	-25 °C … +50 °C
Storage temperature range	-40 °C … +85 °C

Certifications/Standards

Conformity	CE UKCA
Certifications	cULus (E135145) URus (E490188)
Standards	EN 61000-6-2 EN 61000-6-3 UL 60947-5-1 UL 2367

Dimensions

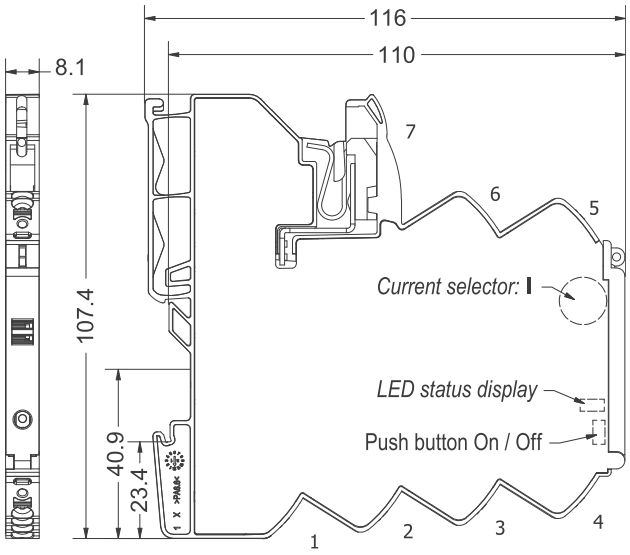

PIN assignment

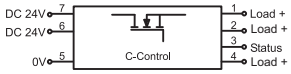

1: Load +
2: Load +
3: Status output
4: Load +
5: 0V
6: + Supply (alternative)
7: + Supply

2: Characteristic medium

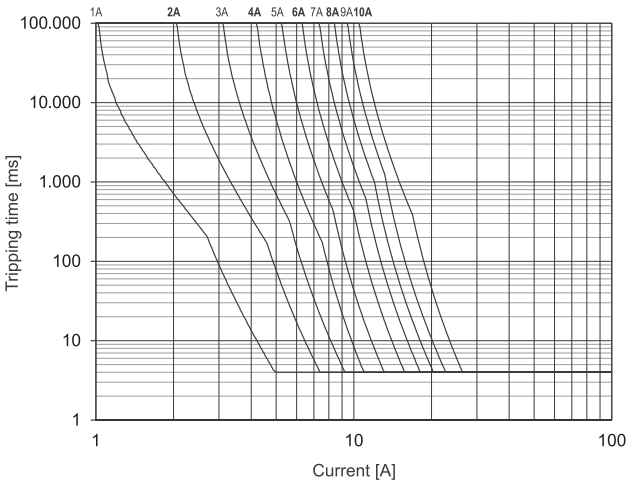

Use

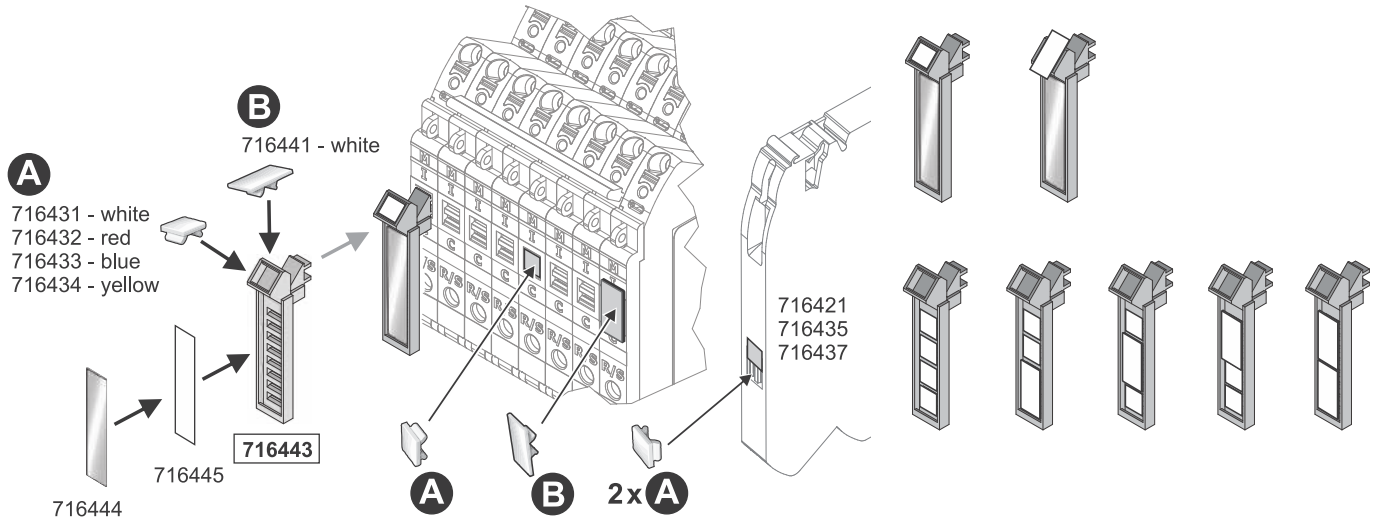

LED status

LED Status, Button, Rotary Switch

LED green	*ON*	*Function is OK**
LED green, flashing 1 Hz	*Overload*	*Load above 90 % of I nominal*
LED green, flashing 5 Hz	*Overload*	*Load above 100 % of I nominal*
LED red	*OFF*	*Module switched off or acknowledged**
LED red, flashing 1 Hz	*Overload*	*Output off due to overload/short circuit**
LED red, flashing 5 Hz	*Error*	*Wiring error – feedback (internal error)*
LED red, flashing shortly	*OFF*	*Output off via remote set/reset*
LED red/green, flashing 1 Hz	*ON*	*Target settings via rotary switch deviate from actual settings.* ***NOTICE: Switching off and on via pushbutton required.***
*Button ****	*ON/OFF*	*Nominal operation: ON/OFF* *Load monitoring tripped: 1st push: acknowledge* *2nd push: ON*
*Rotary Switch (I) – Switch Position***	*Rated current*	

** If the operating voltage is switched off, the last status is saved (Default).*
*** Accept the setting - after switching on again via the button, not by Remote Set/Reset*
**** Master function - switch off via push button, can only be switched on again via push button*

For further information see also the operating instructions

Signal output

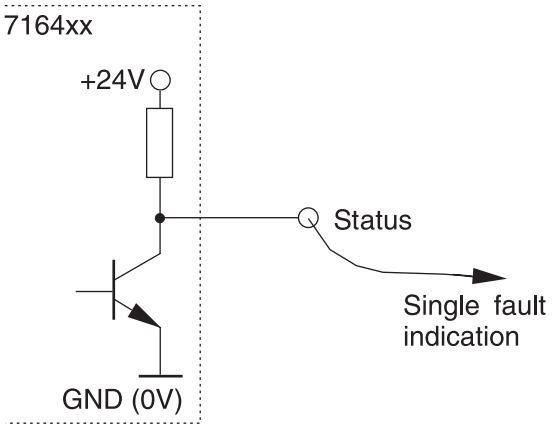

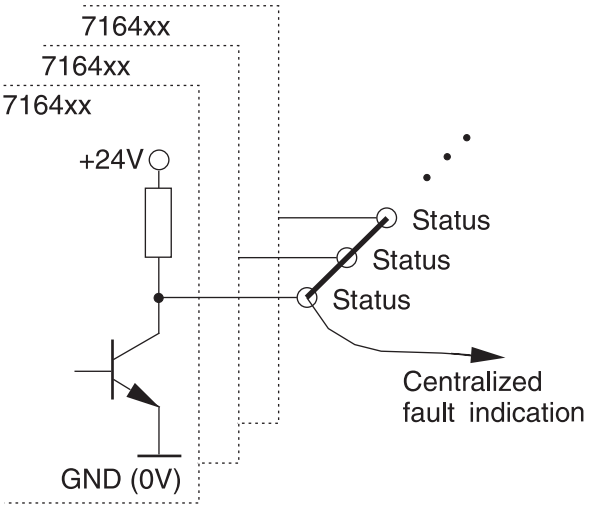

Mounting diagram

HINWEIS / NOTICE / AVIS

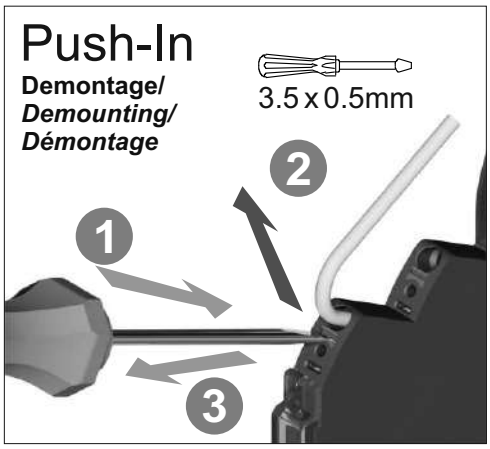

Technical data sheet

Load monitoring · LOCC-Box-EC

Electronic circuit breaker rated up to DC 10 A
Single-channel design, adjustable current range: DC 1 A – 10 A
Fixed characteristic: slow 1

Identification

Type	LOCC-BOX-EC I-C3
Part No.	716412.0300

Product version

Hardware revision	2.0
Software version	2.6
Datasheet version	00

Input

Type of function	1-channel 1 pin switching
Rated voltage U_N	DC 12/24 V
Operation voltage range	DC 10–30 V
Rated current I_N	DC 10 A
Supply current	DC 40 A over Cu-rails 10 × 3 mm
Reverse voltage protection	Internal electronics
Connection type input	Screwless contact slide

Control input (Set / Reset)

Signal level	DC 12/24 V acc. to IEC 61131-2

Output

Switching element	MOSFET
Output current	Max. DC 10 A
Voltage drop	Max. 215 mV (10 A)

Status display output	LED green: operating voltage present, no error LED red: error in load circuit
Switch-on capacity	10000 µF
Current range	1 A – 10 A (adjustable via switch in 1 A steps)
Characteristic	Slow 1 (3)

Signal output

Signal level	DC 12/24 V: operating voltage on standby, no error, DC 0 V: error, output switched off and manual "OFF"
Switching element	Transistor, collector with pull-up resistance

General

Dimensions (w × h × d)	8.1 mm × 107.4 mm × 116.0 mm
Housing material	PA 6.6 (UL 94 V-0, NFF I2, F2)
Mounting	DIN rail mountable TS35 (EN 60715)
Installation position	Any
MTBF	690000 h
Degree of protection	IP20 (only as complete system with supply terminal and end block)
Connection type	Push-In 0.25 mm² – 2.5 mm² AWG 24 – AWG 14
Weight/unit	0.07 kg
PU (units)	1

General ambient conditions

Operation temperature range	-25 °C … +50 °C
Storage temperature range	-40 °C … +85 °C

Certifications/Standards

Conformity	CE UKCA
Certifications	cULus (E135145) URus (E490188)
Standards	EN 61000-6-2 EN 61000-6-3 UL 60947-5-1 UL 2367

Dimensions

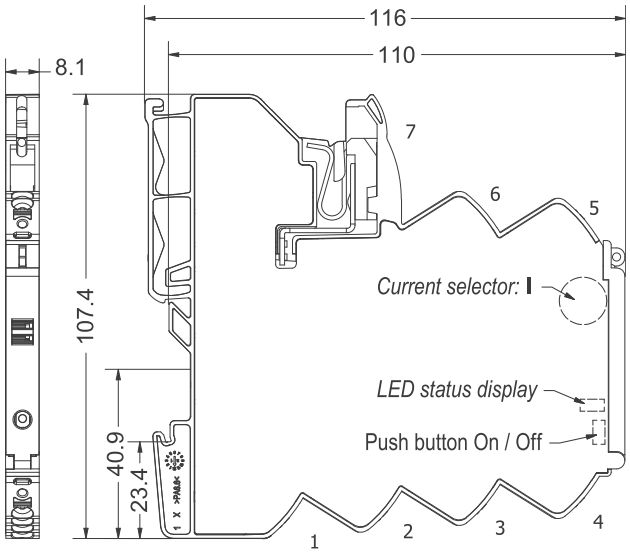

PIN assignment

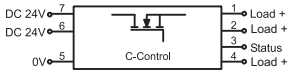

1: Load +
2: Load +
3: Status output
4: Load +
5: 0V
6: + Supply (alternative)
7: + Supply

3: Characteristic slow-1

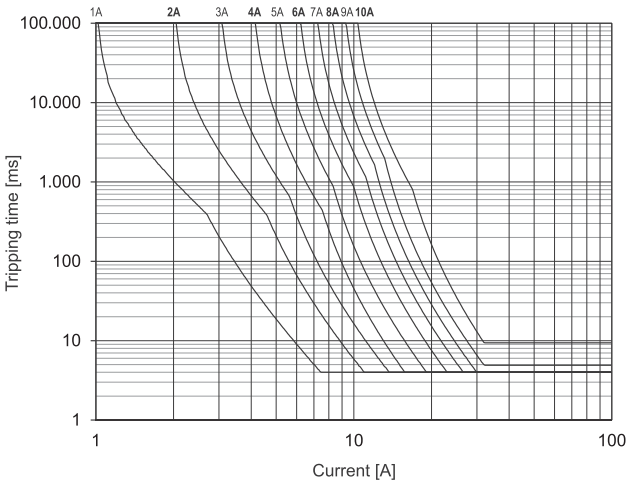

Use

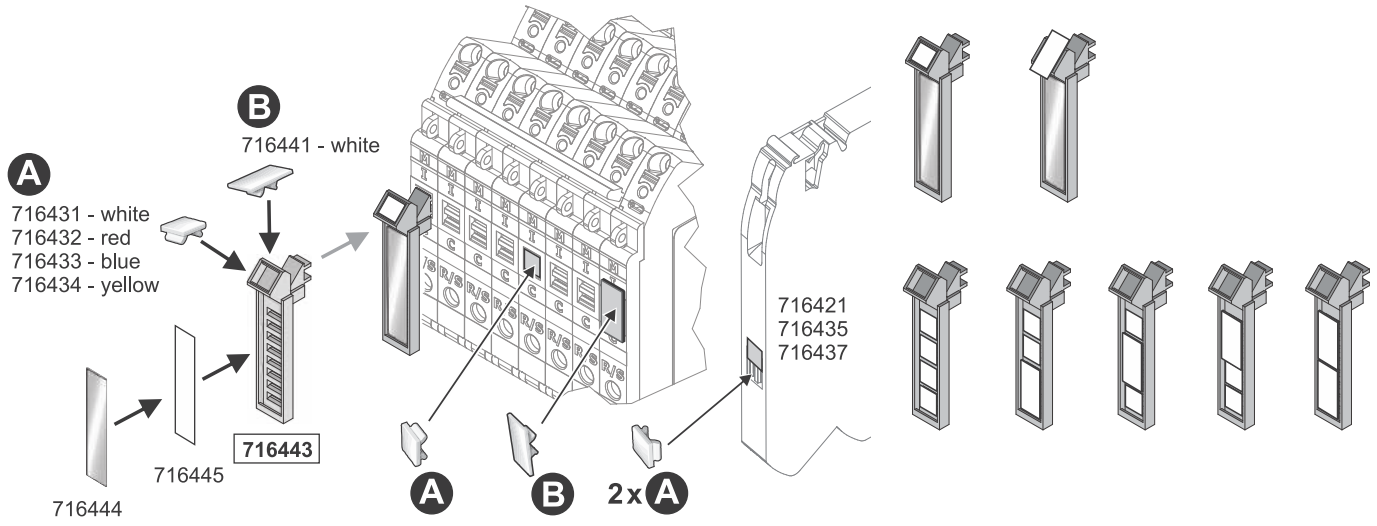

LED status

LED Status, Button, Rotary Switch

LED green	*ON*	*Function is OK**
LED green, flashing 1 Hz	*Overload*	*Load above 90 % of I nominal*
LED green, flashing 5 Hz	*Overload*	*Load above 100 % of I nominal*
LED red	*OFF*	*Module switched off or acknowledged**
LED red, flashing 1 Hz	*Overload*	*Output off due to overload/short circuit**
LED red, flashing 5 Hz	*Error*	*Wiring error – feedback (internal error)*
LED red, flashing shortly	*OFF*	*Output off via remote set/reset*
LED red/green, flashing 1 Hz	*ON*	*Target settings via rotary switch deviate from actual settings.* ***NOTICE: Switching off and on via pushbutton required.***
*Button ****	*ON/OFF*	*Nominal operation: ON/OFF* *Load monitoring tripped: 1st push: acknowledge* *2nd push: ON*
*Rotary Switch (I) – Switch Position***	*Rated current*	

** If the operating voltage is switched off, the last status is saved (Default).*
*** Accept the setting - after switching on again via the button, not by Remote Set/Reset*
**** Master function - switch off via push button, can only be switched on again via push button*

For further information see also the operating instructions

Signal output

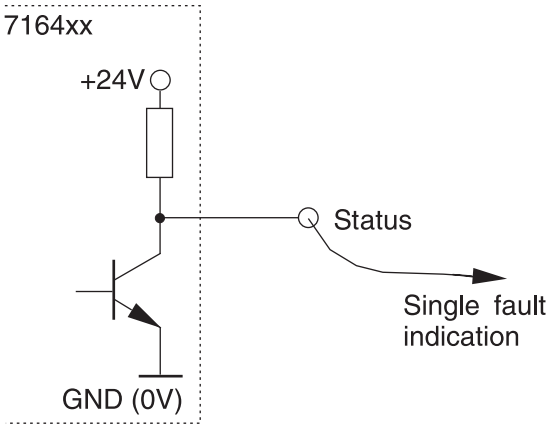

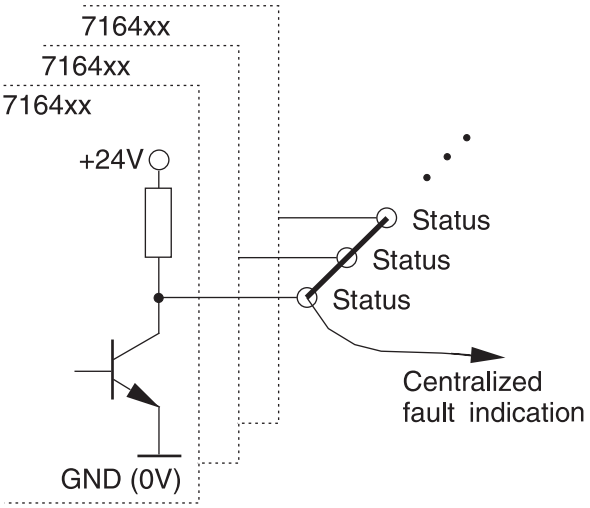

Mounting diagram

HINWEIS / NOTICE / AVIS

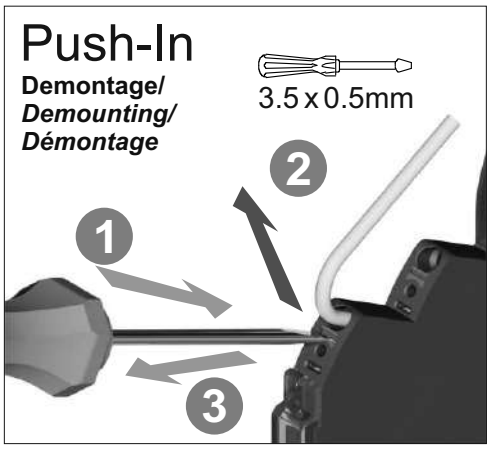

Technical data sheet

Load monitoring · LOCC-Box-EC

Electronic circuit breaker rated up to DC 10 A
Single-channel design, adjustable current range: DC 1 A – 10 A
Fixed characteristic: slow 1

Identification

Type	LOCC-BOX-EC I-C3
Part No.	716412.0350

Product version

Hardware revision	2.0
Software version	2.6
Datasheet version	00

Input

Type of function	1-channel 1 pin switching
Rated voltage U_N	DC 12/24 V
Operation voltage range	DC 10–30 V
Rated current I_N	DC 10 A
Supply current	DC 40 A over Cu-rails 10 × 3 mm
Reverse voltage protection	Internal electronics
Connection type input	Screwless contact slide

Control input (Set / Reset)

Signal level	DC 12/24 V acc. to IEC 61131-2

Output

Switching element	MOSFET
Output current	Max. DC 10 A
Voltage drop	Max. 215 mV (10 A)

Status display output	LED green: operating voltage present, no error LED red: error in load circuit
Switch-on capacity	10000 µF
Current range	1 A – 10 A (adjustable via switch in 1 A steps)
Characteristic	Slow 1 (3)

Signal output

Signal level	DC 12/24 V: operating voltage on standby, no error, DC 0 V: error, output switched off and manual "OFF"
Switching element	Transistor, collector with pull-up resistance

General

Dimensions (w × h × d)	8.1 mm × 107.4 mm × 116.0 mm
Housing material	PA 6.6 (UL 94 V-0, NFF I2, F2)
Mounting	DIN rail mountable TS35 (EN 60715)
Installation position	Any
MTBF	690000 h
Degree of protection	IP20 (only as complete system with supply terminal and end block)
Connection type	Push-In 0.25 mm² – 2.5 mm² AWG 24 – AWG 14
Weight/unit	0.07 kg
PU (units)	50

General ambient conditions

Operation temperature range	-25 °C … +50 °C
Storage temperature range	-40 °C … +85 °C

Certifications/Standards

Conformity	CE UKCA
Certifications	cULus (E135145) URus (E490188)
Standards	EN 61000-6-2 EN 61000-6-3 UL 60947-5-1 UL 2367

Dimensions

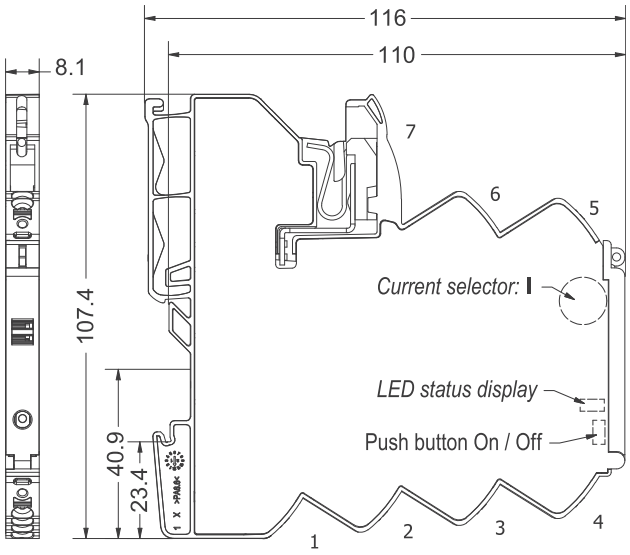

PIN assignment

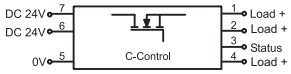

1: Load +
2: Load +
3: Status output
4: Load +
5: 0V
6: + Supply (alternative)
7: + Supply

3: Characteristic slow-1

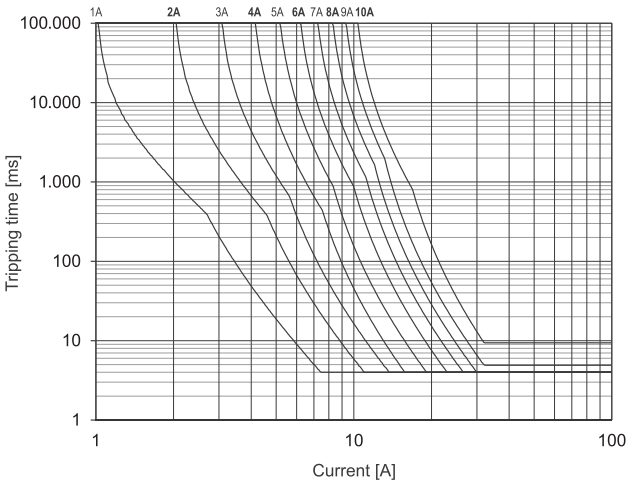

Use

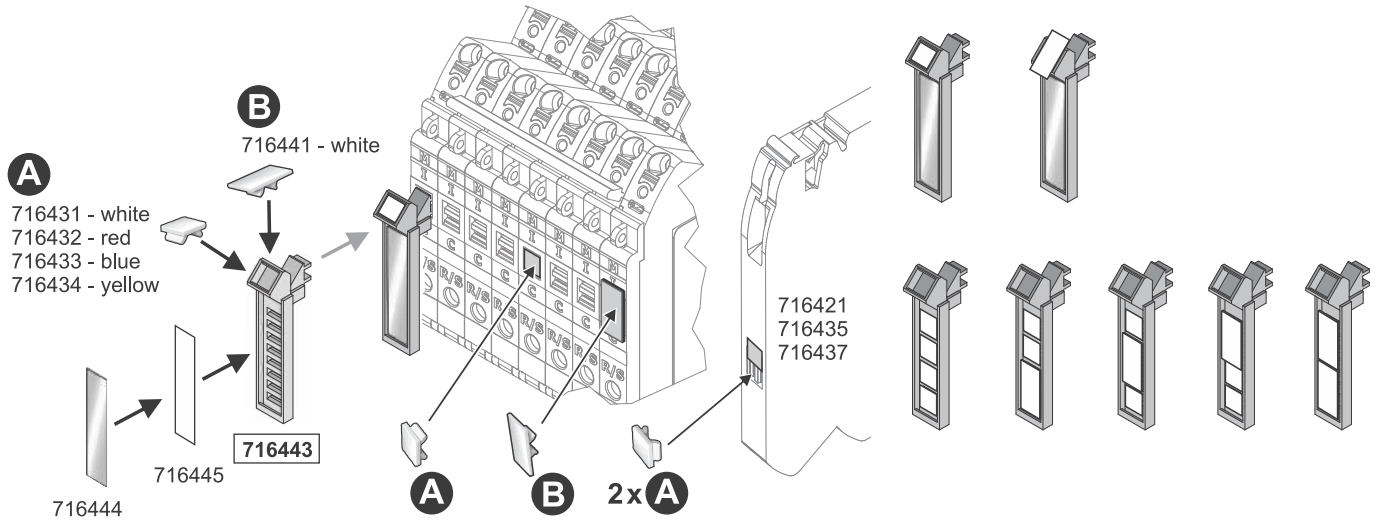

LED status

LED Status, Button, Rotary Switch

LED green	*ON*	*Function is OK**
LED green, flashing 1 Hz	*Overload*	*Load above 90 % of I nominal*
LED green, flashing 5 Hz	*Overload*	*Load above 100 % of I nominal*
LED red	*OFF*	*Module switched off or acknowledged**
LED red, flashing 1 Hz	*Overload*	*Output off due to overload/short circuit**
LED red, flashing 5 Hz	*Error*	*Wiring error – feedback (internal error)*
LED red, flashing shortly	*OFF*	*Output off via remote set/reset*
LED red/green, flashing 1 Hz	*ON*	*Target settings via rotary switch deviate from actual settings.* ***NOTICE: Switching off and on via pushbutton required.***
*Button ****	*ON/OFF*	*Nominal operation: ON/OFF* *Load monitoring tripped: 1st push: acknowledge* *2nd push: ON*
*Rotary Switch (I) – Switch Position***	*Rated current*	

** If the operating voltage is switched off, the last status is saved (Default).*
*** Accept the setting - after switching on again via the button, not by Remote Set/Reset*
**** Master function - switch off via push button, can only be switched on again via push button*

For further information see also the operating instructions

Signal output

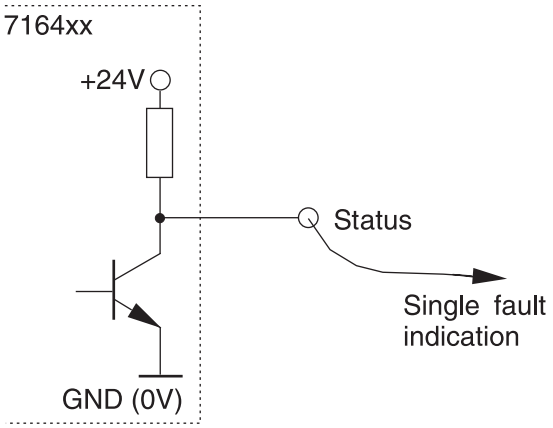

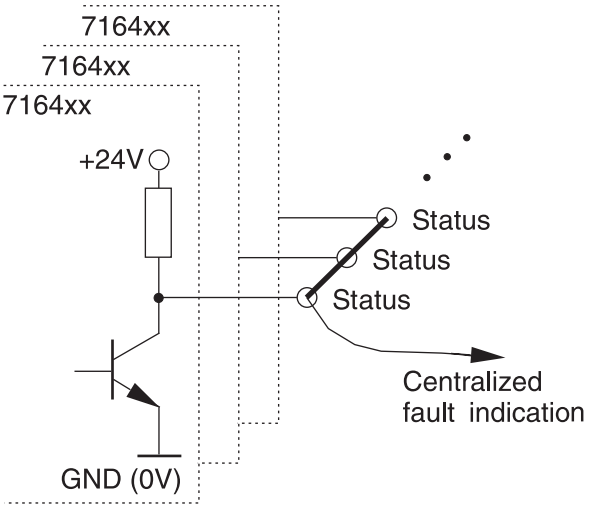

Mounting diagram

HINWEIS / NOTICE / AVIS

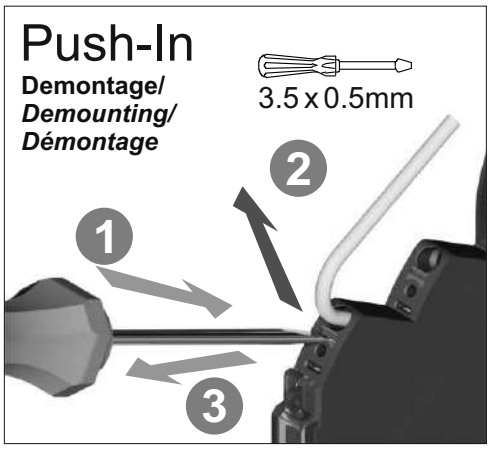

Technical data sheet

Load monitoring · LOCC-Box-EC

Electronic circuit breaker rated up to DC 10 A
Single-channel design, adjustable current range: DC 1 A – 10 A
Fixed characteristic: slow-3

Identification

Type	LOCC-BOX-EC I-C5
Part No.	716412.0500

Product version

Hardware revision	2.0
Software version	2.6
Datasheet version	00

Input

Type of function	1-channel 1 pin switching
Rated voltage U_N	DC 12/24 V
Operation voltage range	DC 10–30 V
Rated current I_N	DC 10 A
Supply current	DC 40 A over Cu-rails 10 × 3 mm
Reverse voltage protection	Internal electronics
Connection type input	Screwless contact slide

Control input (Set / Reset)

Signal level	DC 12/24 V acc. to IEC 61131-2

Output

Switching element	MOSFET
Output current	Max. DC 10 A
Voltage drop	Max. 215 mV (10 A)

Status display output	LED green: operating voltage present, no error LED red: error in load circuit
Switch-on capacity	10000 µF
Current range	1 A – 10 A (adjustable via switch in 1 A steps)
Characteristic	Slow 3 (5)

Signal output

Signal level	DC 12/24 V: operating voltage on standby, no error, DC 0 V: error, output switched off and manual "OFF"
Switching element	Transistor, collector with pull-up resistance

General

Dimensions (w × h × d)	8.1 mm × 107.4 mm × 116.0 mm
Housing material	PA 6.6 (UL 94 V-0, NFF I2, F2)
Mounting	DIN rail mountable TS35 (EN 60715)
Installation position	Any
MTBF	690000 h
Degree of protection	IP20 (only as complete system with supply terminal and end block)
Connection type	Push-In 0.25 mm² – 2.5 mm² AWG 24 – AWG 14
Weight/unit	0.07 kg
PU (units)	1

General ambient conditions

Operation temperature range	-25 °C … +50 °C
Storage temperature range	-40 °C … +85 °C

Certifications/Standards

Conformity	CE UKCA
Certifications	cULus (E135145) URus (E490188)
Standards	EN 61000-6-2 EN 61000-6-3 UL 60947-5-1 UL 2367

Dimensions

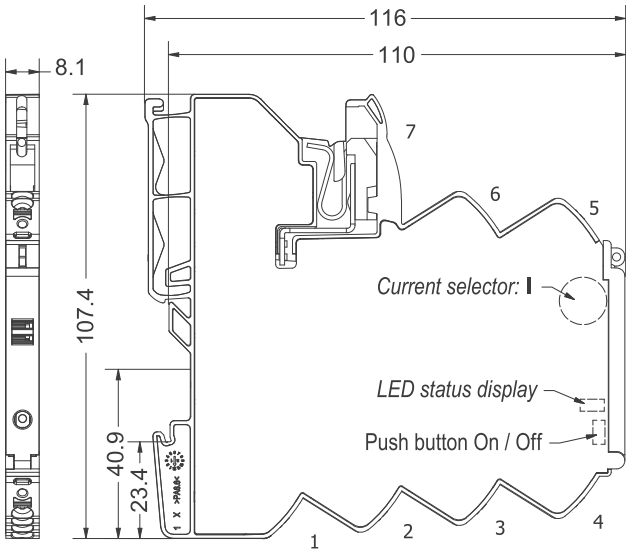

PIN assignment

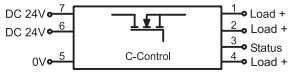

1: Load +
2: Load +
3: Status output
4: Load +
5: 0V
6: + Supply (alternative)
7: + Supply

5: Characteristic slow-3

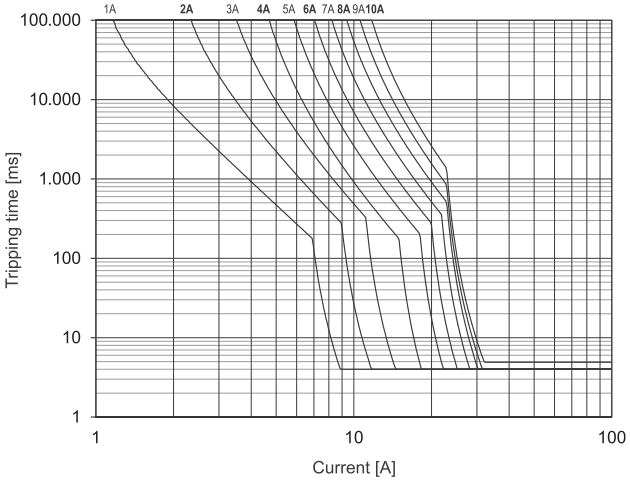

Use

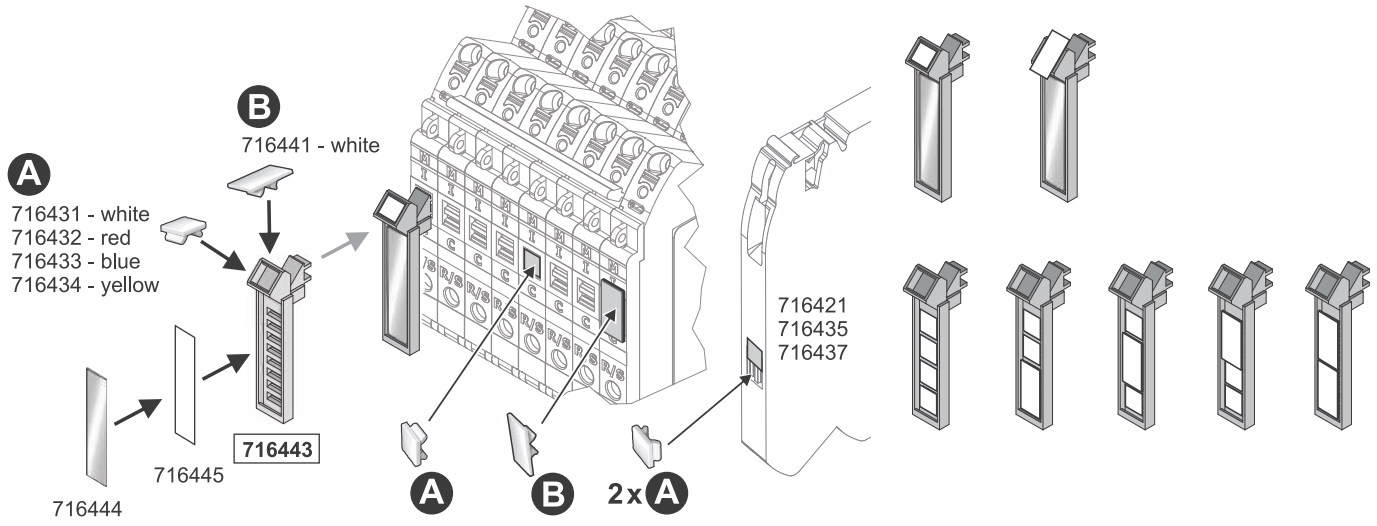

LED status

LED Status, Button, Rotary Switch

LED green	*ON*	*Function is OK**
LED green, flashing 1 Hz	*Overload*	*Load above 90 % of I nominal*
LED green, flashing 5 Hz	*Overload*	*Load above 100 % of I nominal*
LED red	*OFF*	*Module switched off or acknowledged**
LED red, flashing 1 Hz	*Overload*	*Output off due to overload/short circuit**
LED red, flashing 5 Hz	*Error*	*Wiring error – feedback (internal error)*
LED red, flashing shortly	*OFF*	*Output off via remote set/reset*
LED red/green, flashing 1 Hz	*ON*	*Target settings via rotary switch deviate from actual settings.* ***NOTICE: Switching off and on via pushbutton required.***
*Button ****	*ON/OFF*	*Nominal operation: ON/OFF* *Load monitoring tripped: 1st push: acknowledge* *2nd push: ON*
*Rotary Switch (I) – Switch Position***	*Rated current*	

** If the operating voltage is switched off, the last status is saved (Default).*
*** Accept the setting - after switching on again via the button, not by Remote Set/Reset*
**** Master function - switch off via push button, can only be switched on again via push button*

For further information see also the operating instructions

Signal output

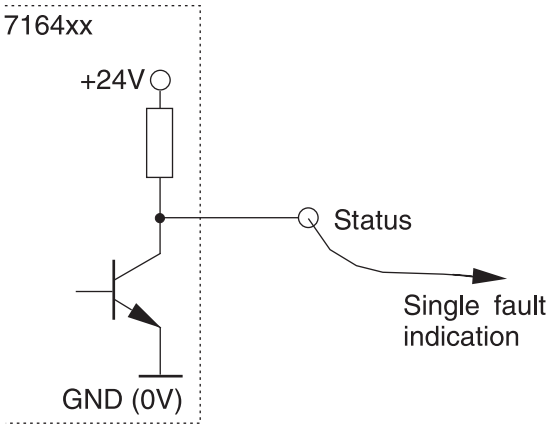

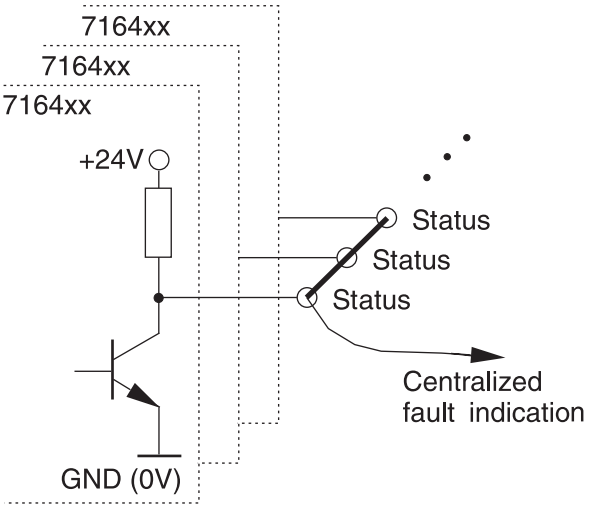

Mounting diagram

HINWEIS / NOTICE / AVIS

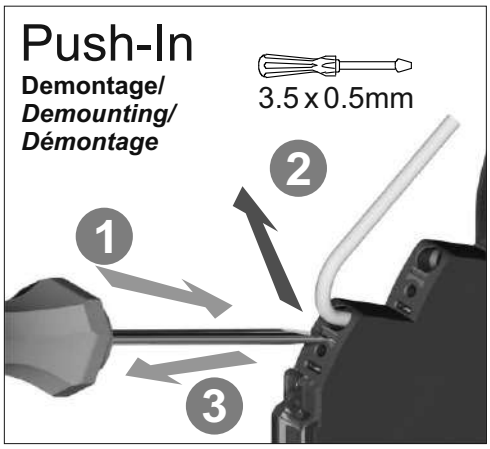

Technical data sheet

Load monitoring · LOCC-Box-EC · See order code

Electronic circuit breaker rated up to DC 10 A
Single-channel design, adjustable current range: DC 1 A – 10 A
Fixed characteristic: fast, medium, slow 1, -2, -3 (see order code)

Identification

Type	LOCC-Box-EC-I-C
Part No.	716412.xxxx

Product version

Hardware revision	2.0
Software version	2.6
Datasheet version	02

Input

Type of function	1-channel 1 pin switching
Rated voltage U_N	DC 12/24 V
Operation voltage range	DC 10–30 V
Rated current I_N	DC 10 A
Supply current	DC 40 A over Cu-rails 10 × 3 mm
Reverse voltage protection	Internal electronics
Connection type input	Screwless contact slide

Control input (Set / Reset)

Signal level	DC 12/24 V acc. to IEC 61131-2

Output

Switching element	MOSFET
Output current	Max. DC 10 A
Voltage drop	Max. 215 mV (10 A)

Status display output	LED green: operating voltage present, no error LED red: error in load circuit
Switch-on capacity	10000 µF
Current range	1 A – 10 A (adjustable via switch in 1 A steps)
Characteristic	Fast (1), medium (2), slow 1 (3), slow 2 (4), slow 3 (5) (see order code), see 'characteristic curves'

Signal output

Signal level	DC 12/24 V: operating voltage on standby, no error, DC 0 V: error, output switched off and manual "OFF"
Switching element	Transistor, collector with pull-up resistance

General

Dimensions (w × h × d)	8.1 mm × 107.4 mm × 116.0 mm
Housing material	PA 6.6 (UL 94 V-0, NFF I2, F2)
Mounting	DIN rail mountable TS35 (EN 60715)
Installation position	Any
MTBF	690000 h
Degree of protection	IP20 (only as complete system with supply terminal and end block)
Connection type	Push-In 0.25 mm² – 2.5 mm² AWG 24 – AWG 14
Weight/unit	0.07 kg
PU (units)	1

General ambient conditions

Operation temperature range	-25 °C . . . +50 °C
Storage temperature range	-40 °C . . . +85 °C

Certifications/Standards

Conformity	CE UKCA
Certifications	cULus (E135145) URus (E490188)
Standards	EN 61000-6-2 EN 61000-6-3 UL 60947-5-1 UL 2367

Dimensions

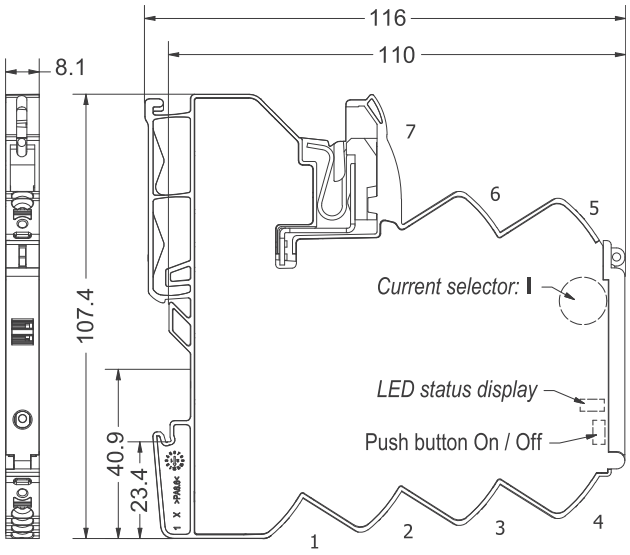

PIN assignment

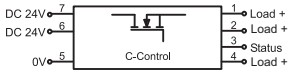

1: Load +
2: Load +
3: Status output
4: Load +
5: 0V
6: + Supply (alternative)
7: + Supply

1: Characteristic fast

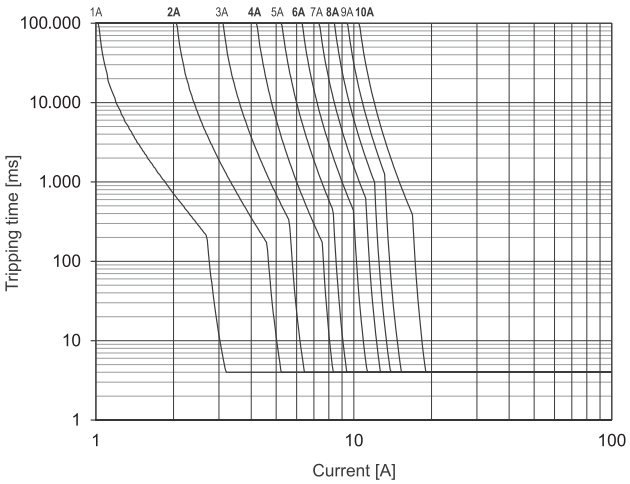

2: Characteristic medium

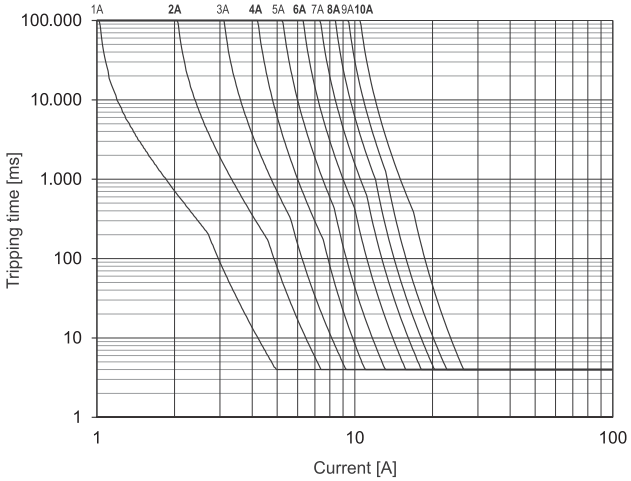

3: Characteristic slow-1

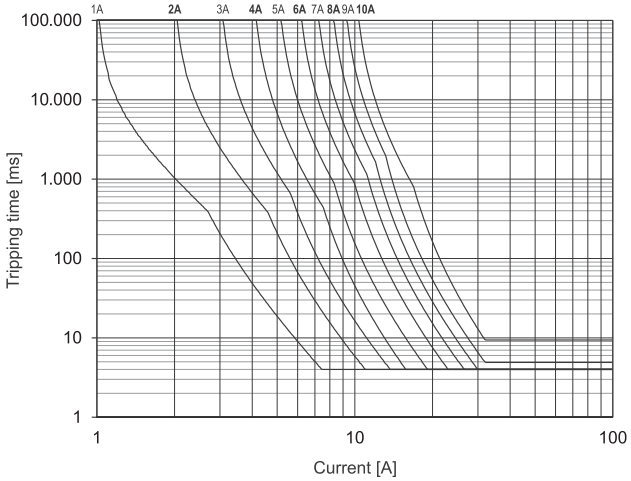

4: Characteristic slow-2

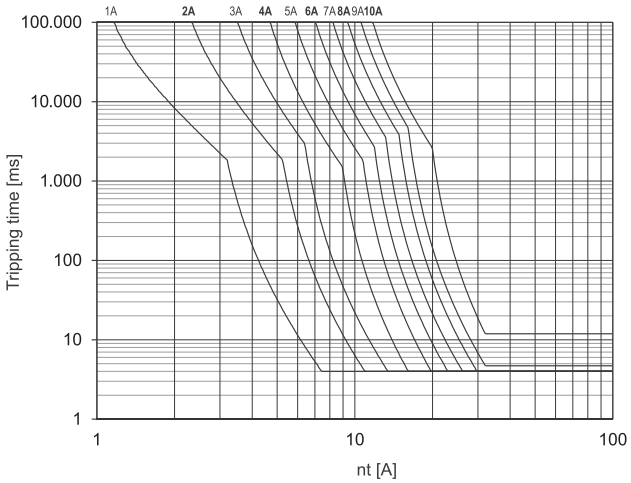

5: Characteristic slow-3

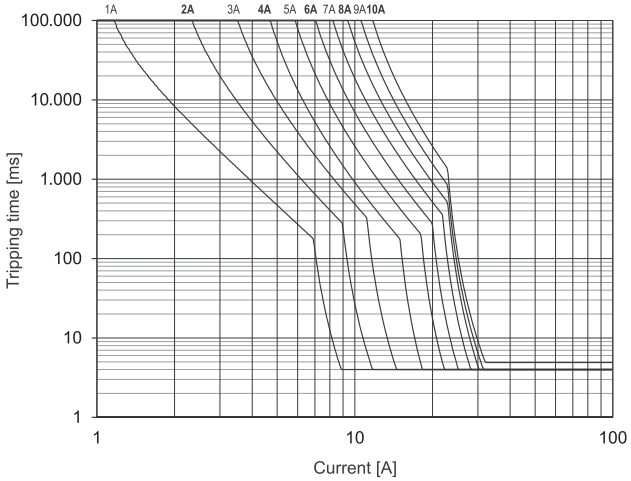

Use

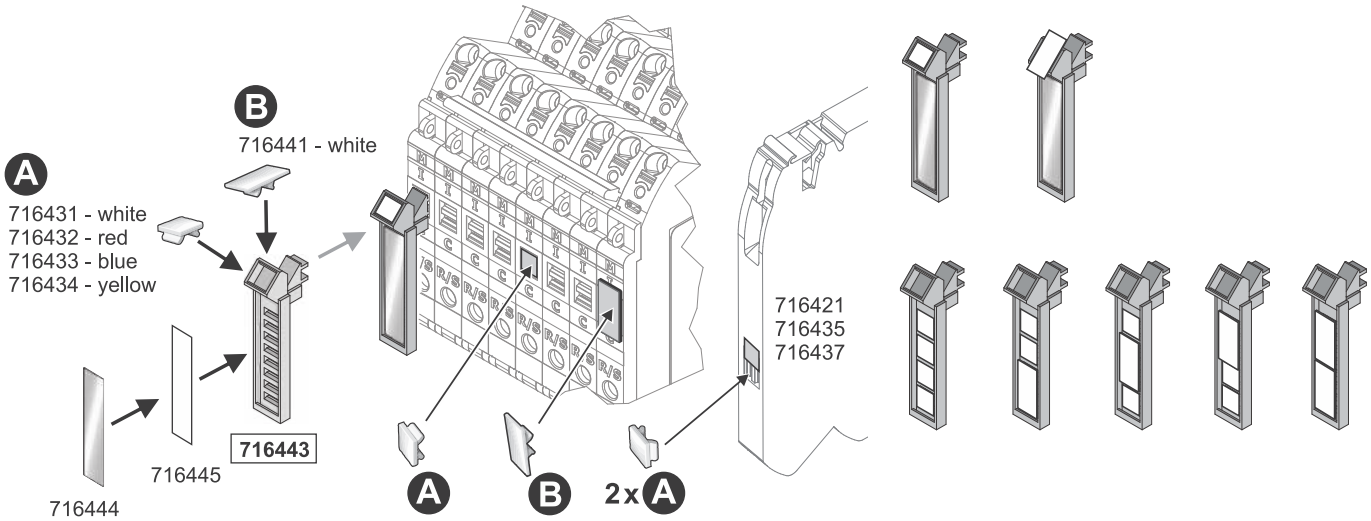

Order code

716412. 03 50

Type

PU
- 00 1 pc.
- **50** 50 pcs.

Characteristic
- 01 fast
- 02 medium
- 0**3** slow-1
- 04 slow-2
- 05 slow-3

LED status

LED Status, Button, Rotary Switch

LED green	*ON*	*Function is OK**
LED green, flashing 1 Hz	*Overload*	*Load above 90 % of I nominal*
LED green, flashing 5 Hz	*Overload*	*Load above 100 % of I nominal*
LED red	*OFF*	*Module switched off or acknowledged**
LED red, flashing 1 Hz	*Overload*	*Output off due to overload/short circuit**
LED red, flashing 5 Hz	*Error*	*Wiring error – feedback (internal error)*
LED red, flashing shortly	*OFF*	*Output off via remote set/reset*
LED red/green, flashing 1 Hz	*ON*	*Target settings via rotary switch deviate from actual settings.* ***NOTICE: Switching off and on via pushbutton required.***
*Button ****	*ON/OFF*	*Nominal operation: ON/OFF* *Load monitoring tripped: 1st push: acknowledge* *2nd push: ON*
*Rotary Switch (I) – Switch Position***		*Rated current*

** If the operating voltage is switched off, the last status is saved (Default).*
*** Accept the setting - after switching on again via the button, not by Remote Set/Reset*
**** Master function - switch off via push button, can only be switched on again via push button*

For further information see also the operating instructions

Signal output

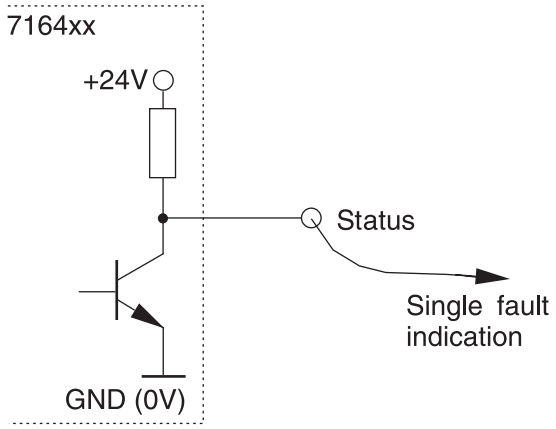

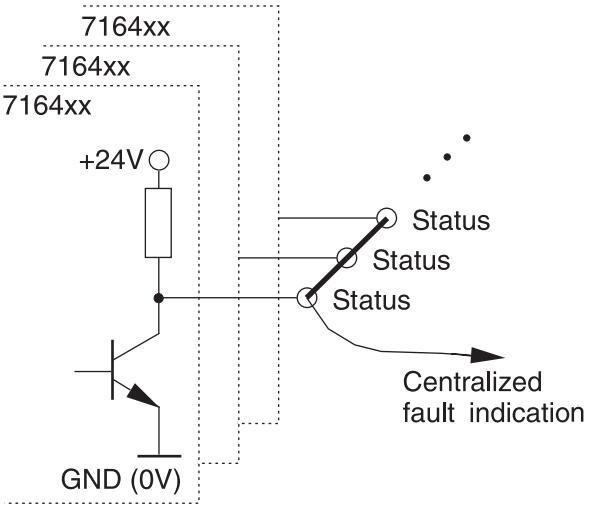

Mounting diagram

HINWEIS / NOTICE / AVIS

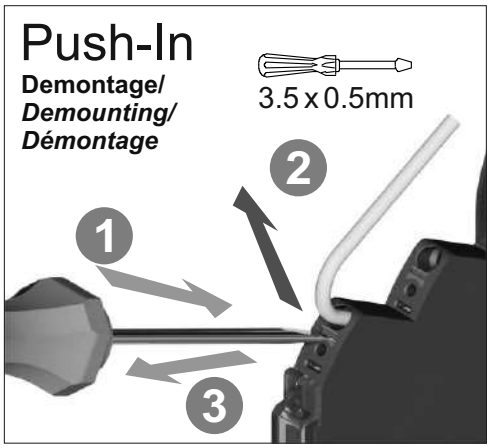

Typschlüssel

LOCC-Box - EC - I - C1 -xxxx

- Productfamily: LOCC-Box
- Variant: EC Eco
- Current range: **I** paramterizable
- Characteristic:
  - **C1** fast
  - C2 medium
  - C3 slow-1
  - C4 slow-2
  - C5 slow-3
- Software Parameter: xxxx

Technical data sheet

Load monitoring · LOCC-Box-C2

Electronic circuit breaker rated up to DC 4 A
Single channel version, adjustable current range, adjustable characteristic
with current limitation acc. to NEC class 2

Identification

Type	LOCC-Box-C2 7-6413
Part No.	716413

Product version

Hardware revision	2.0
Software version	2.3
Datasheet version	01

Input

Type of function	1-channel 1 pin switching
Rated voltage U_N	DC 12/24 V
Operation voltage range	DC 11–30 V
Rated current I_N	DC 5 A
Supply current	DC 40 A over Cu-rails 10 × 3 mm
Reverse voltage protection	Internal electronics
Connection type input	Screwless contact slide

Control input (Set / Reset)

Signal level	DC 12/24 V acc. to EN 61131
OFF	Pulse with falling edge >100 ms, <800 ms
ON	Pulse with falling edge > 1 s

Output

Switching element	MOSFET

Output current	Max. DC 4 A
Power output	Limited to <100 W
Voltage drop	Max. 275 mV (4 A)
Status display output	LED green: operating voltage present, no error LED red: error in load circuit
Switch-on capacity	4700 µF
Current range	0.5 A – 4 A (can be set via switch in 0.5 A steps)
Characteristic	Fast (1), medium (2), slow 1 (3) see ’characteristic curves’
Current limitation	<5 A

Signal output

Signal level	DC 24 V: operating voltage on standby, no error, DC 0 V: error, output switched off and manual "OFF"
Switching element	Transistor, collector with pull-up resistance

General

Dimensions (w × h × d)	8.1 mm × 107.4 mm × 116.0 mm
Housing material	PA 6.6 (UL 94 V-0, NFF I2, F2)
Mounting	DIN rail mountable TS35 (EN 60715)
Installation position	Any
Degree of protection	IP20 (only as complete system with power terminal and end block)
Connection type	Push-In 0.25 mm² – 2.5 mm² AWG 24 – AWG 14
Weight/unit	0.07 kg
PU (units)	1

General ambient conditions

Operation temperature range	-25 °C . . . +50 °C
Storage temperature range	-40 °C . . . +85 °C
Relative air humidity	10 – 95 % RH, brief condensation
Vibration resistance	4 g acc. to EN 60068-2-6
Shock resistance	15 g acc. EN 60068-2-27

Certifications/Standards

Conformity	CE UKCA
Certifications	cULus (E170585) URus (E490188)

Technical data sheet

Load monitoring · LOCC-Box-C2

Standards	EN 61000-6-2 EN 61000-6-3 EN 61131-2 UL 61010-1 UL 61010-2-201 UL 2367 DNVGL-CG-0339 Temperature Class C – not certified Humidity Class B – not certified Vibration Class B – not certified EMC Class A – not certified

Dimensions

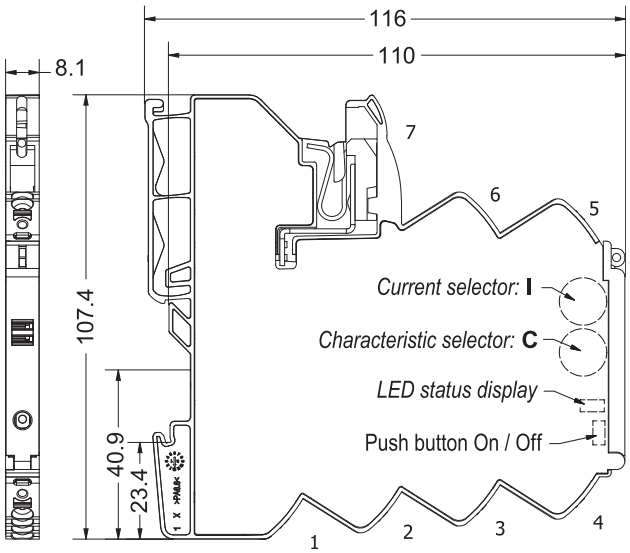

PIN assignment

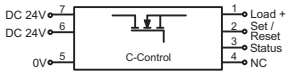

1: + Output
2: Control input (Set/Reset)
3: Status output
4: NC
5: 0V
6: + Supply (alternative)
7: + Supply

1: Characteristic fast

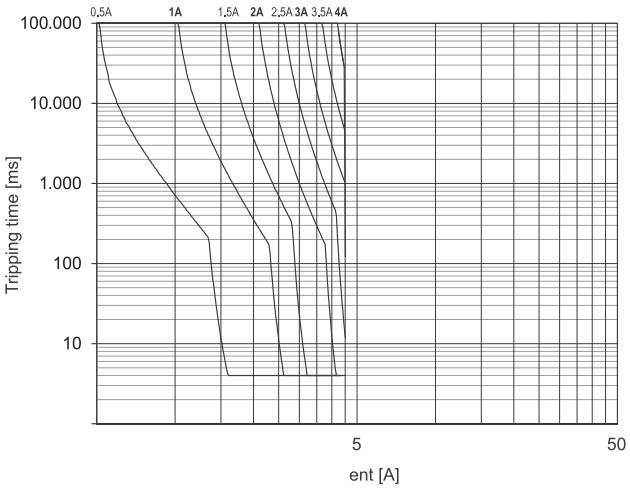

2: Characteristic medium

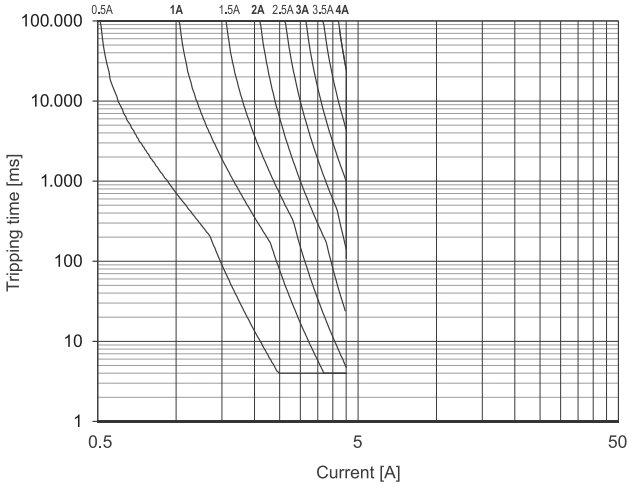

3: Characteristic slow-1

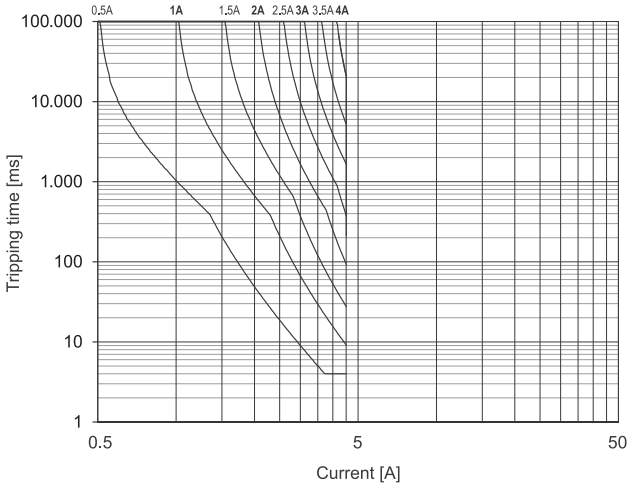

Use

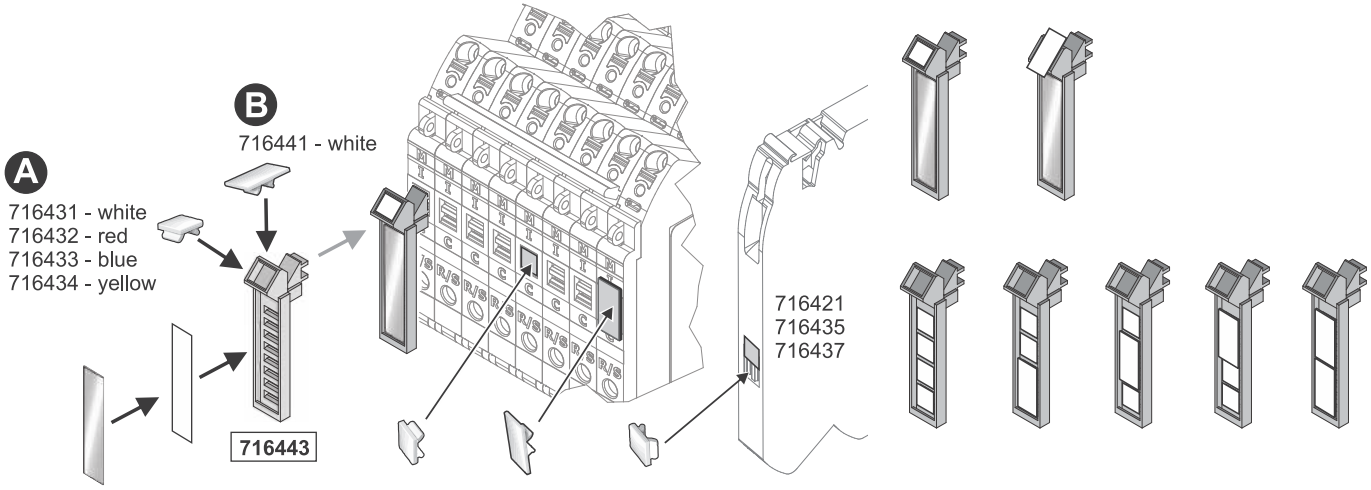

LED status

LED Status, Button, Rotary Switch

LED green	*ON*	*Function is OK**
LED green, flashing 1 Hz	*Overload*	*Load above 90 % of I nominal*
LED green, flashing 5 Hz	*Overload*	*Load above 100 % of I nominal*
LED red	*OFF*	*Module switched off or acknowledged**
LED red, flashing 1 Hz	*Overload*	*Output off due to overload/short circuit**
LED red, flashing 5 Hz	*Error*	*Wiring error – feedback (internal error)*
LED red, flashing shortly	*OFF*	*Output off via remote set/reset*
LED red/green, flashing 1 Hz	*ON*	*Target settings via rotary switch deviate from actual settings.* ***NOTICE: Switching off and on via pushbutton required.***
*Button ****	*ON/OFF*	*Nominal operation: ON/OFF* *Load monitoring tripped: 1st push: acknowledge* *2nd push: ON*
*Rotary Switch (I) – Switch Position***	*Rated current, see page 4.*	
*Rotary Switch (C) – Switch Position***	*Characteristic: 1: fast 2: middle* *3: slow-1 4: slow-2 5: slow-3*	

** If the operating voltage is switched off, the last status is saved (Default).*
*** Accept the setting - after switching on again via the button, not by Remote Set/Reset*
**** Master function - switch off via push button, can only be switched on again via push button*

For further information see also the operating instructions

Signal output

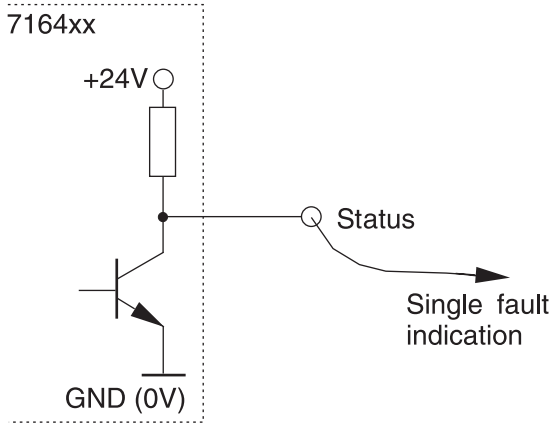

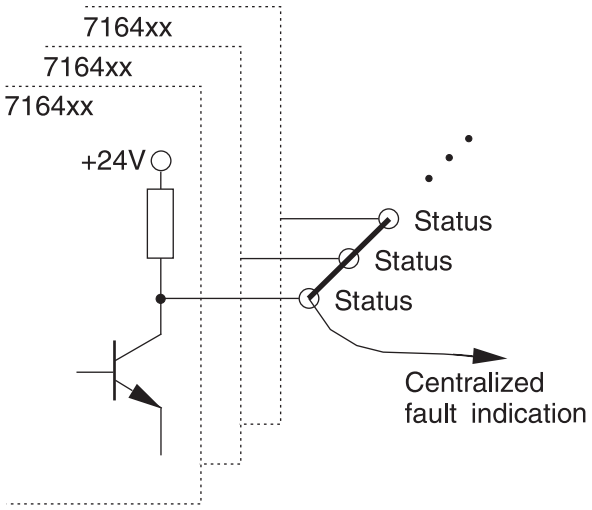

Mounting diagram

HINWEIS / NOTICE / AVIS

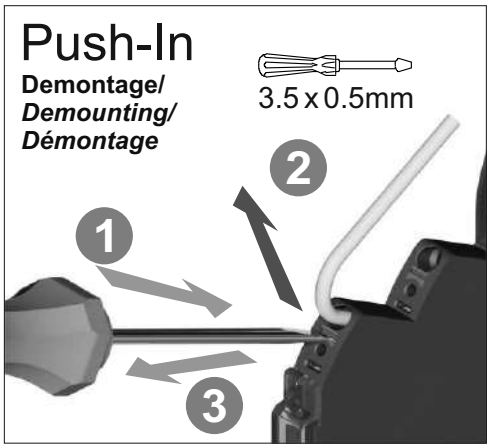

Technical data sheet

Load monitoring · LOCC-Box-C2 NET

Electronic circuit breaker rated up to DC 4 A, with communication
Single channel version, adjustable current range, adjustable characteristic
with current limitation acc. to NEC class 2

Identification

Type	LOCC-Box-C2 NET 7-6414
Part No.	716414

Product version

Hardware revision	2.0
Software version	2.3
Datasheet version	02

Input

Type of function	1-channel 1 pin switching
Rated voltage U_N	DC 12/24 V
Operation voltage range	DC 11–30 V
Rated current I_N	DC 5 A
Supply current	DC 40 A over Cu-rails 10 × 3 mm
Reverse voltage protection	Internal electronics
Connection type input	Screwless contact slide

Control input (Set / Reset)

Signal level	DC 12/24 V acc. to IEC 61131-2
OFF	Pulse with falling edge >100 ms, <800 ms
ON	Pulse with falling edge > 1 s

Output

Switching element	MOSFET

Output current	Max. DC 4 A
Power output	Limited to <100 W
Voltage drop	Max. 275 mV (4 A)
Status display output	LED green: operating voltage present, no error LED red: error in load circuit
Switch-on capacity	4700 µF
Current range	0.5 A – 4 A (can be set via switch in 0.5 A steps)
Characteristic	Fast (1), medium (2), slow 1 (3) see ’characteristic curves’
Current limitation	<5 A

Signal output

Signal level	DC 24 V: operating voltage on standby, no error, DC 0 V: error, output switched off and manual "OFF"
Switching element	Transistor, collector with pull-up resistance

General

Dimensions (w × h × d)	8.1 mm × 107.4 mm × 116.0 mm
Housing material	PA 6.6 (UL 94 V-0, NFF I2, F2)
Color of the housing	Basalt grey
Mounting	DIN rail mountable TS35 (EN 60715)
Installation position	Any
MTBF	690000 h
Degree of protection	IP20 (only as complete system with power terminal and end block)
Connection type	Push-In 0.25 mm² – 2.5 mm² AWG 24 – AWG 14
Weight/unit	0.07 kg
PU (units)	1

General ambient conditions

Operation temperature range	-25 °C … +50 °C
Storage temperature range	-40 °C … +85 °C
Relative air humidity	10 – 95 % RH, brief condensation
Vibration resistance	4 g acc. to EN 60068-2-6
Shock resistance	15 g acc. EN 60068-2-27

Certifications/Standards

Conformity	CE UKCA

Standards	EN 61000-6-2 EN 61000-6-3 EN 61131-2 UL 61010-1 UL 61010-2-201 UL 2367 DNVGL-CG-0339 Humidity Class D – not certified Temperature Class C – not certified Vibration Class B – not certified EMC Class A – not certified

Equipment/Spare parts

Accessories	**0 V collective terminal, white:** Part.-No. 716420 | LOCC-Box-SK 7-6420 | PU: 2 units **Intermediate feed-in terminal:** Part.-No. 716421 | LOCC-Box-EKL 7-6421 | PU: 2 units **Distance terminal without contact:** Part.-No. 716422 | LOCC-Box-DKL 7-6422 | PU: 2 units **Empty housing without terminals:** Part.-No. 716424 | LOCC-Box-DY 7-6424 | PU: 2 units **Supply set 10 mm²:** Part.-No. 716425 | LOCC-Box-ES 7-6425 | PU: 1 unit **Supply set 16 mm²:** Part.-No. 716447 | LOCC-Box-ES16 7-6447 | PU: 1 unit **Jumper comb 8-pin, white:** Part.-No. 716428 | LOCC-Box-BKW 7-6428 | PU: 5 units **Jumper comb 8-pin, red:** Part.-No. 716429 | LOCC-Box-BKR 7-6429 | PU: 5 units **Jumper comb 8-pin, blue:** Part.-No. 716430 | LOCC-Box-BKB 7-6430 | PU: 5 units **Jumper comb 16-pin, white:** Part.-No. 716438 | LOCC-Box-BKW 7-6438 | PU: 5 units **Jumper comb 16-pin, red:** Part.-No. 716439 | LOCC-Box-BKR 7-6439 | PU: 5 units **Jumper comb 16-pin, blue:** Part.-No. 716440 | LOCC-Box-BKB 7-6440 | PU: 5 units **Labelling sign 5×5 mm, white:** Part.-No. 716431 | LOCC-Box-BZW 7-6431 | PU: 1 unit (200 tabs) **Labelling sign 5×5 mm, red:** Part.-No. 716432 | LOCC-Box-BZR 7-6432 | PU: 1 unit (200 tabs) **Labelling sign 5×5 mm, blue:** Part.-No. 716433 | LOCC-Box-BZB 7-6433 | PU: 1 unit (200 tabs) **Labelling sign 5×5 mm, yellow:** Part.-No. 716434 | LOCC-Box-BZG 7-6434 | PU: 1 unit (200 tabs) **Tag holder, white:** Part.-No. 716443 | LOCC-Box-BZT 7-6443 | PU: 20 units **Cover for tag holder, transparent:** Part.-No. 716444 | LOCC-Box-BAD 7-6444 | PU: 20 units **Material name, white:** Part.-No. 716445 | LOCC-Box-LEB 7-6445 | PU: 10 units **Material name, white:** Part.-No. 716446 | LOCC-Box-BZW 7-6446 | PU: 1 unit 716426 | LOCC-Box-CU 7-6426 | PU: 1 unit 716427 | LOCC-Box-AD 7-6427 | PU: 1 unit

Dimensions

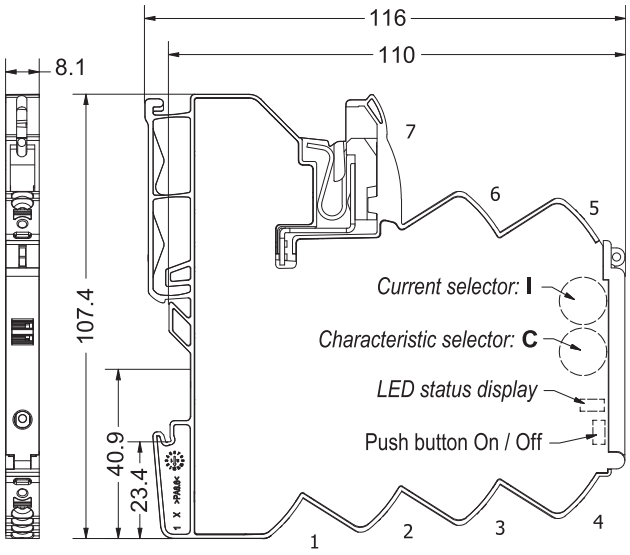

PIN assignment

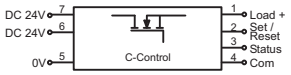

1: + Output
2: Control input (Set/Reset)
3: Status output
4: 1 Wire bus (Communication)
5: 0V
6: + Supply (alternative)
7: + Supply

1: Characteristic fast

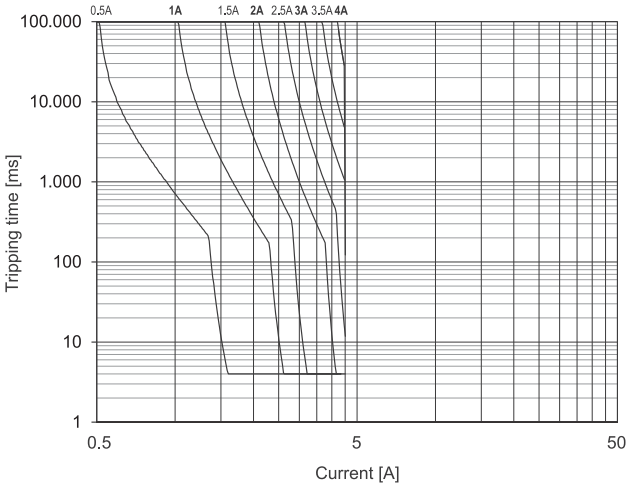

2: Characteristic medium

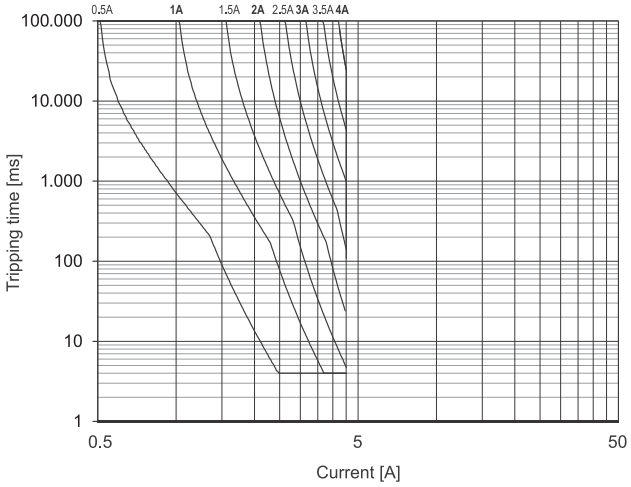

3: Characteristic slow-1

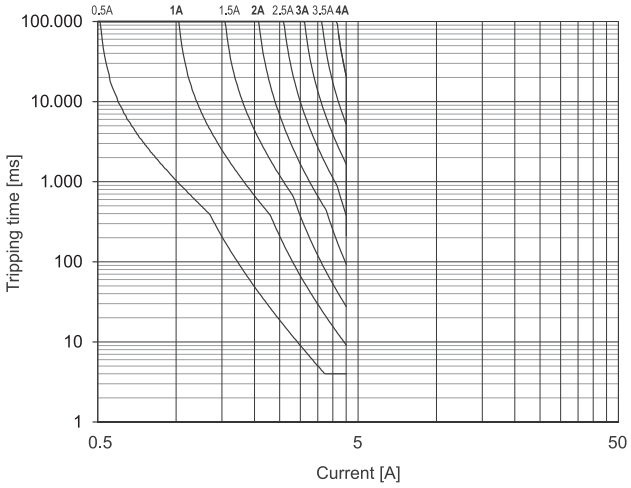

Use

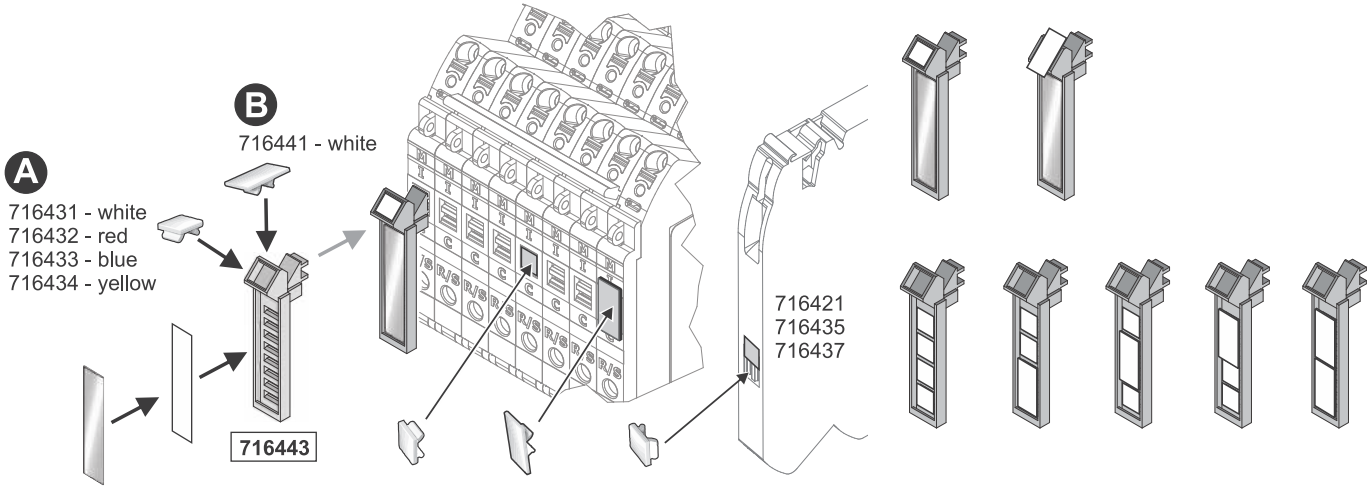

LED status

LED Status, Button, Rotary Switch

LED green	*ON*	*Function is OK**
LED green, flashing 1 Hz	*Overload*	*Load above 90 % of I nominal*
LED green, flashing 5 Hz	*Overload*	*Load above 100 % of I nominal*
LED red	*OFF*	*Module switched off or acknowledged**
LED red, flashing 1 Hz	*Overload*	*Output off due to overload/short circuit**
LED red, flashing 5 Hz	*Error*	*Wiring error – feedback (internal error)*
LED red, flashing shortly	*OFF*	*Output off via remote set/reset*
LED red/green, flashing 1 Hz	*ON*	*Target settings via rotary switch deviate from actual settings.* ***NOTICE: Switching off and on via pushbutton required.***
*Button ****	*ON/OFF*	*Nominal operation: ON/OFF* *Load monitoring tripped: 1st push: acknowledge* *2nd push: ON*
*Rotary Switch (I) – Switch Position***	*Rated current, see page 4.*	
*Rotary Switch (C) – Switch Position***	*Characteristic: 1: fast 2: middle* *3: slow-1 4: slow-2 5: slow-3*	

** If the operating voltage is switched off, the last status is saved (Default).*
*** Accept the setting - after switching on again via the button, not by Remote Set/Reset*
**** Master function - switch off via push button, can only be switched on again via push button*

For further information see also the operating instructions

Signal output

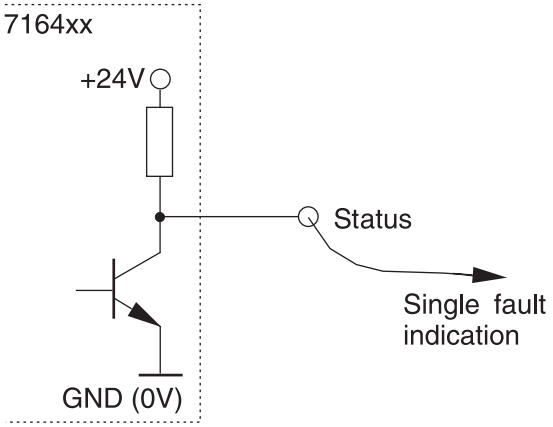

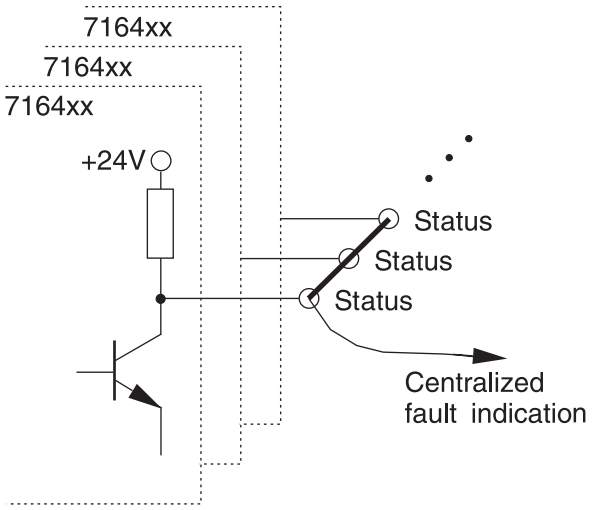

Mounting diagram

HINWEIS / NOTICE / AVIS

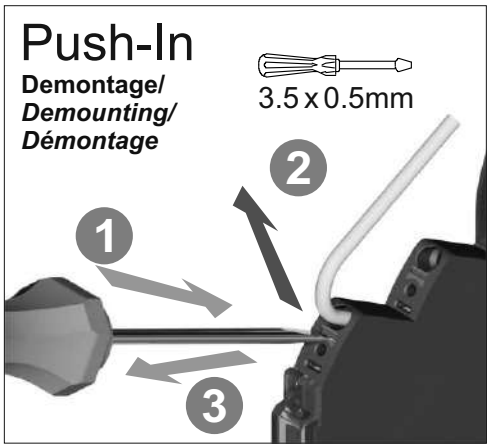

Technical data sheet

Load monitoring · LOCC-Box-ED

Electronic circuit breaker rated up to DC 6 A
Two-channel version, adjustable current range: DC 1 A - 6 A
Fixed characteristic: slow-1

Identification

Type	LOCC-Box-ED I-C3
Part No.	716415.0300

Product version

Hardware revision	2.0
Software version	2.6
Datasheet version	04

Input

Type of function	2-channel 1 pin switching
Rated voltage U_N	DC 12/24 V
Operation voltage range	DC 10–30 V
Rated current I_N	DC 2 × 6 A
Supply current	**DC 40 A**
Reverse voltage protection	Internal electronics
Connection type input	Screwless contact slide

Output

Ampacity	DC 2 × 6 A Total current
Switching element	MOSFET
Output current	Max. DC 6 A per channel
Voltage drop	Max. 115 mV (6 A, per channel)
Status display output	LED green: no error, LED green flashing: 90 % utilisation LED red flashing: triggered, LED red: unit off
Switch-on capacity	10000 µF

Current range	1 A – 6 A (adjustable via switch in 1 A steps)
Characteristic	Slow 1 (3), fixed setting

Signal output

Signal level	DC 12/24 V: operating voltage on standby, no error, DC 0 V: error, output switched off and manual "OFF"
Switching element	Transistor, collector with pull-up resistance

General

Dimensions (w × h × d)	8.1 mm × 107.4 mm × 116.0 mm
Housing material	PA 6.6 (UL 94 V-0, NFF I2, F2)
Color of the housing	RAL 7012 Basalt grey
Mounting	DIN rail mountable TS35 (EN 60715)
Installation position	Any
MTBF	690000 h @ 40 °C, 100 operations button, 30 revolutions coding switch
Degree of protection	IP20 (only as complete system with power terminal and end block)
Connection type	Push-In 0.25 mm² – 2.5 mm² AWG 24 – AWG 14
Weight/unit	0.07 kg
PU (units)	1

General ambient conditions

Operation temperature range	-25 °C … +50 °C
Storage temperature range	-40 °C … +85 °C
Relative air humidity	10 % – 95 %, without condensation
Vibration resistance	4 g acc. to EN 60068-2-6
Shock resistance	15 g acc. EN 60068-2-27

Certifications/Standards

Conformity	CE UKCA
Certifications	cULus (E135145) URus (E490188)
Standards	EN 61000-6-2 EN 61000-6-3 UL 60947-5-1 UL 2367 DNVGL-CG-0339 Humidity Class D – not certified certified certified certified

Dimensions

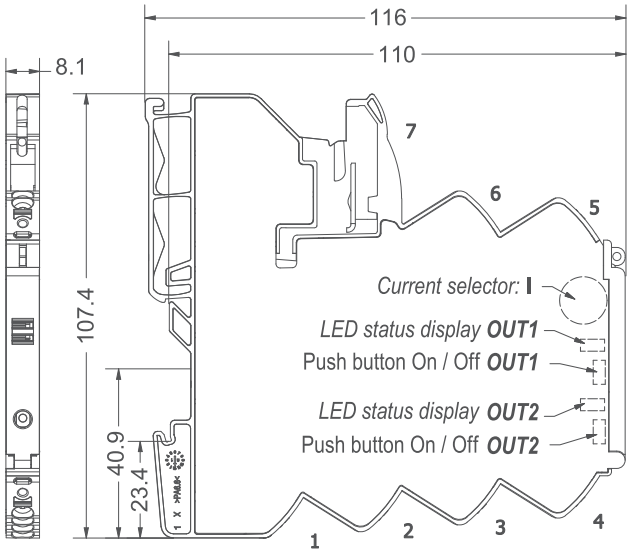

PIN assignment

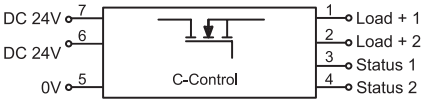

3: Characteristic slow-1

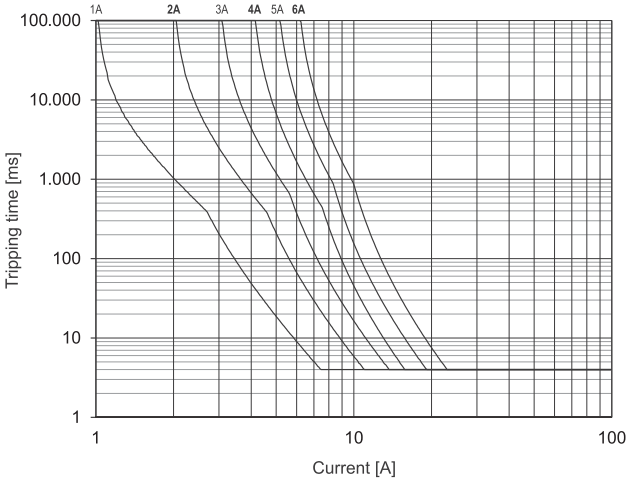

Use

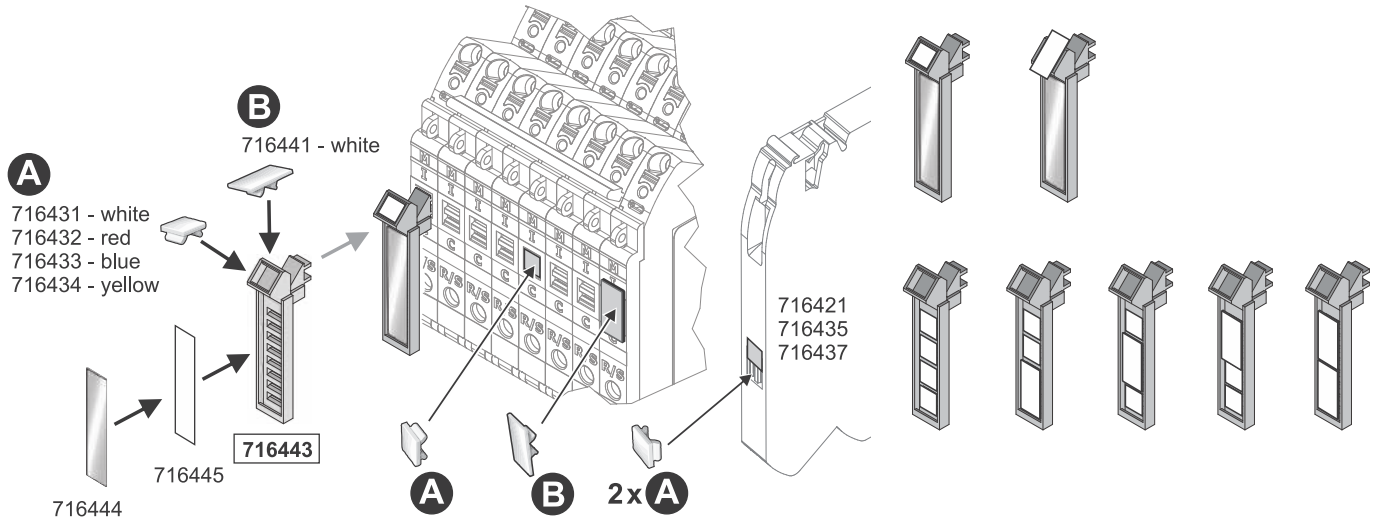

LED status

LED Status, Button, Rotary Switch

LED green	*ON*	*Function is OK**
LED green, flashing 1 Hz	*Overload*	*Load above 90 % of I nominal*
LED green, flashing 5 Hz	*Overload*	*Load above 100 % of I nominal*
LED red	*OFF*	*Module switched off or acknowledged**
LED red, flashing 1 Hz	*Overload*	*Output off due to overload/short circuit**
LED red, flashing 5 Hz	*Error*	*Wiring error – feedback (internal error)*
LED red, flashing shortly	*OFF*	*Output off via remote set/reset*
LED red/green, flashing 1 Hz	*ON*	*Target settings via rotary switch deviate from actual settings.* ***NOTICE: Switching off and on via pushbutton required.***
*Button ****	*ON/OFF*	*Nominal operation: ON/OFF* *Load monitoring tripped: 1st push: acknowledge* *2nd push: ON*
*Rotary Switch (I) – Switch Position***	*Rated current*	

** If the operating voltage is switched off, the last status is saved (Default).*
*** Accept the setting - after switching on again via the button, not by Remote Set/Reset*
**** Master function - switch off via push button, can only be switched on again via push button*

For further information see also the operating instructions

Signal output

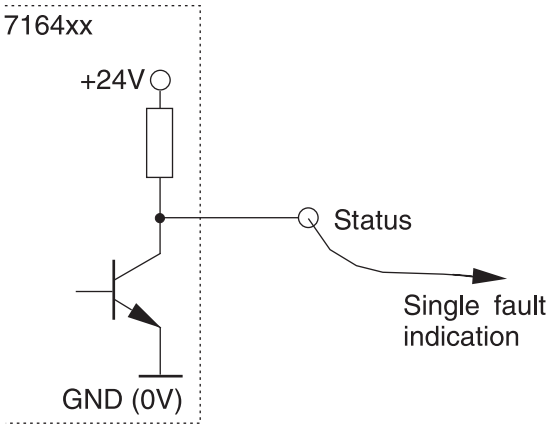

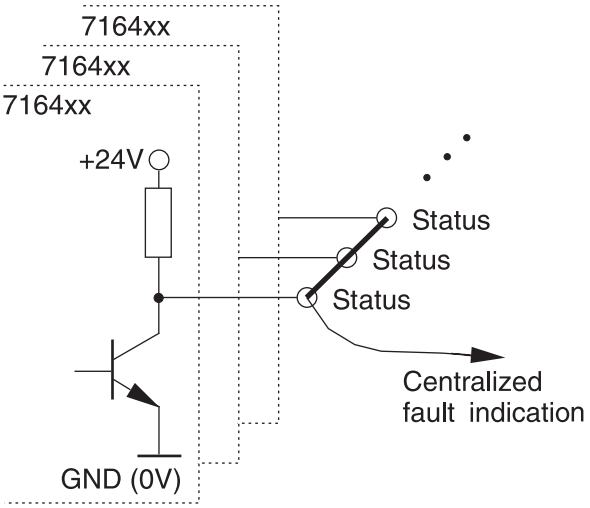

Mounting diagram

HINWEIS / NOTICE / AVIS

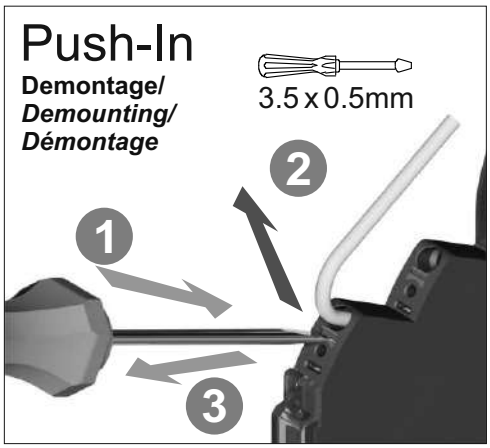

Technical data sheet

Load monitoring · LOCC-Box

Electronic load monitoring up to DC 10 A
Single-channel design, Adjustable current range: DC 1 A – 10 A
Adjustable characteristics, fast, medium, slow 1, -2, -3

Identification

Type	LOCC-Box-FBK 7-6416
Part No.	716416.001.1

Product version

Hardware revision	2.0
Software version	2.6
Datasheet version	03

Input

Type of function	1-channel 1 pin switching
Rated voltage U_N	DC 12/24 V
Operation voltage range	DC 10–30 V
Rated current I_N	DC 10 A
Reverse voltage protection	Internal electronics

Control input (Set / Reset)

Signal level	DC 12/24 V acc. to IEC 61131-2
OFF	Pulse with falling edge >100 ms, <800 ms
ON	Pulse with falling edge > 1 s

Output

Switching element	MOSFET
Output current	Max. DC 10 A
Voltage drop	Max. 215 mV (10 A)

Status display output	LED green: operating voltage present, no error LED red: error in load circuit
Switch-on capacity	10000 µF
Current range	1 A – 10 A (adjustable via switch in 1 A steps)
Characteristic	Fast (1), medium (2), slow 1 (3), slow 2 (4), slow 3 (5) see ’characteristic curves’

Signal output

Signal level	DC 12/24 V: operating voltage on standby, no error, DC 0 V: error, output switched off and manual "OFF"
Switching element	Transistor, collector with pull-up resistance

General

Dimensions (w × h × d)	8.1 mm × 107.4 mm × 116.0 mm
Housing material	PA 6.6 (UL 94 V-0, NFF I2, F2)
Color of the housing	Basalt grey
Mounting	DIN rail mountable TS35 (EN 60715)
Installation position	Any
MTBF	690000 h
Degree of protection	IP20 (only as complete system with supply terminal and end block)
Connection type	Push-In 0.25 mm² – 2.5 mm² AWG 24 – AWG 14
Weight/unit	0.07 kg
PU (units)	1

General ambient conditions

Operation temperature range	-25 °C … +50 °C
Storage temperature range	-40 °C … +85 °C
Relative air humidity	10 % – 95 %, without condensation
Vibration resistance	4 g acc. to EN 60068-2-6
Shock resistance	15 g acc. EN 60068-2-27

Certifications/Standards

Conformity	CE UKCA
Certifications	cULus (E135145) URus (E490188)
Standards	EN 61000-6-2 EN 61000-6-3

Dimensions

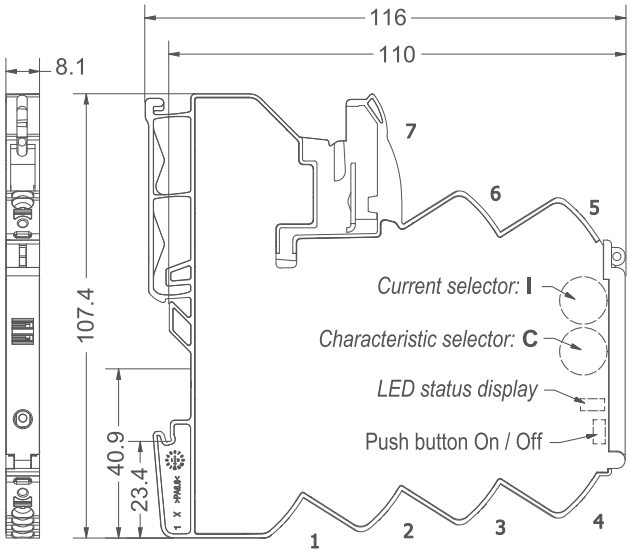

PIN assignment

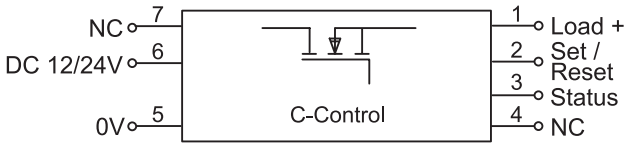

1: + Output
2: Control input (Set/Reset)
3: Status output
4: not used
5: 0V
6: + Supply
7: not used

1: Characteristic fast

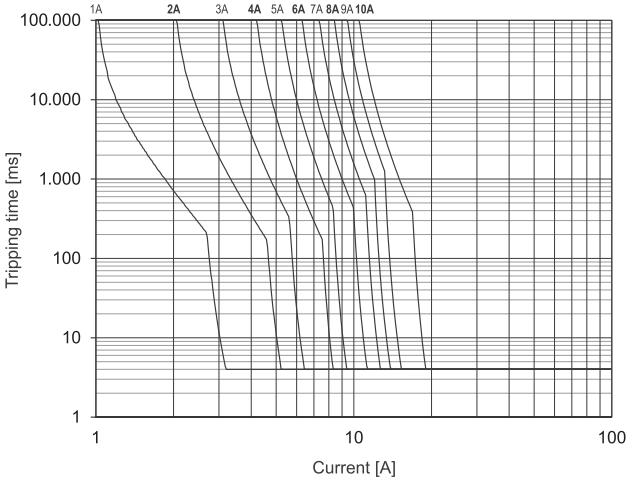

2: Characteristic medium

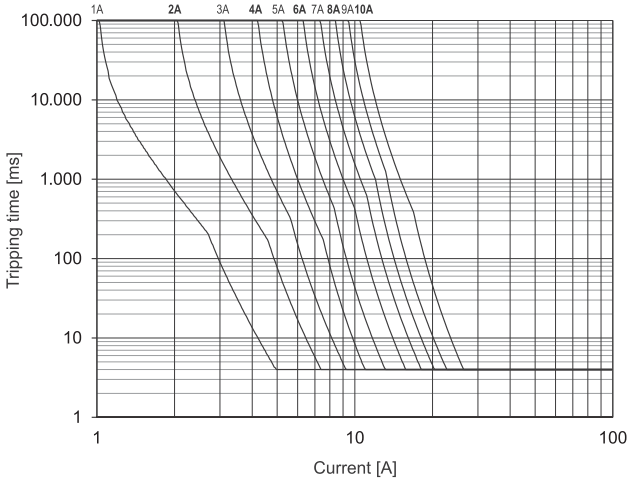

3: Characteristic slow-1

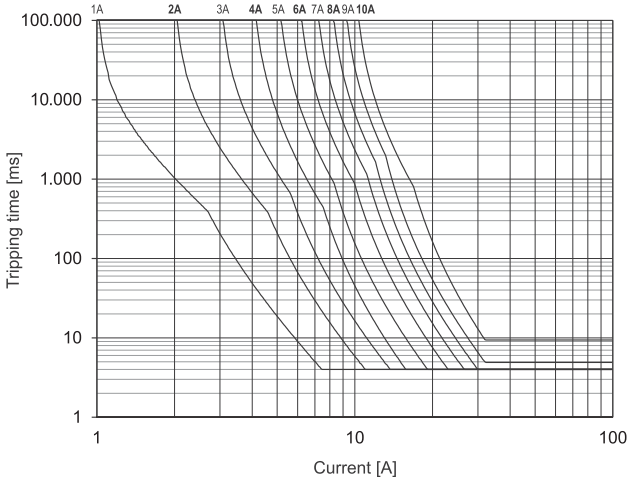

4: Characteristic slow-2

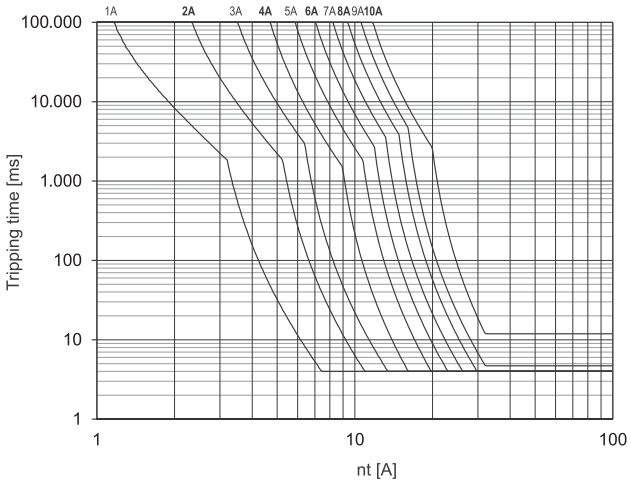

5: Characteristic slow-3

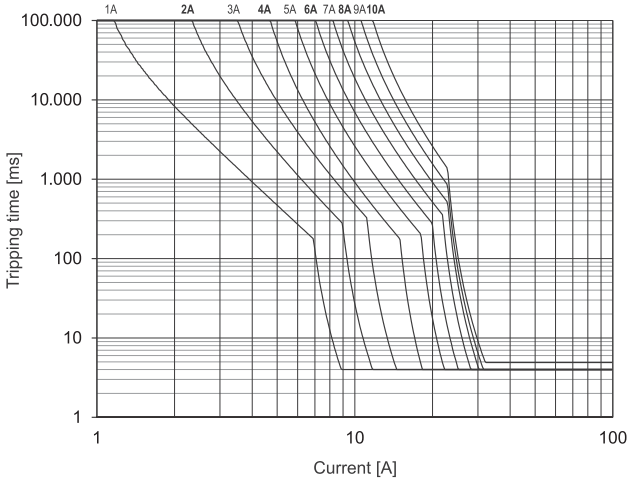

Use

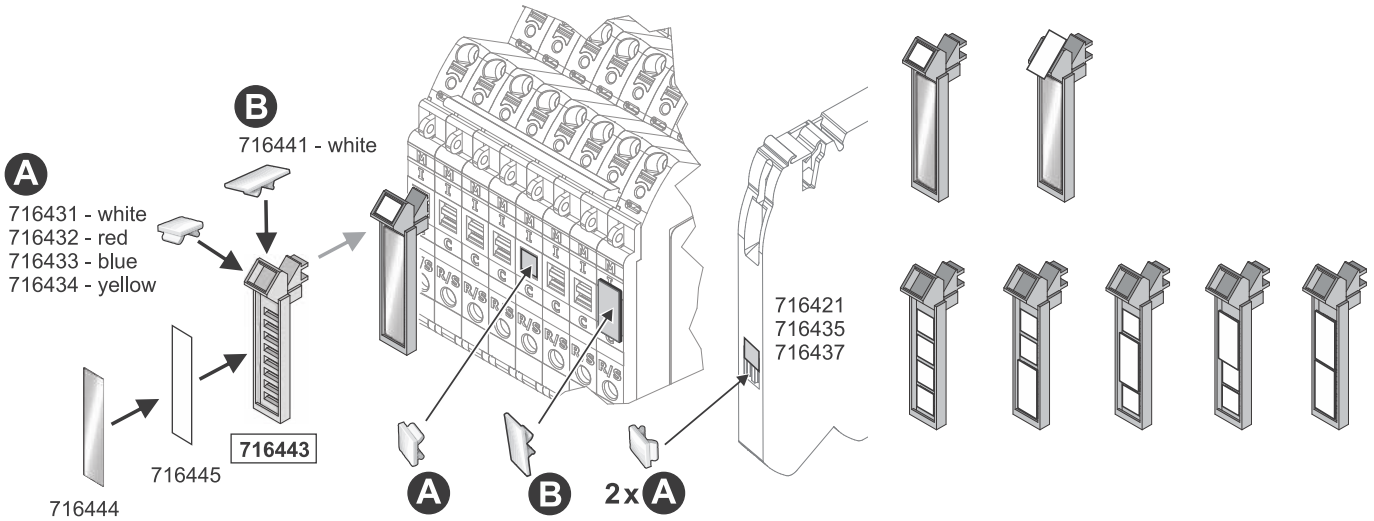

LED status

LED Status, Button, Rotary Switch

LED green	*ON*	*Function is OK**
LED green, flashing 1 Hz	*Overload*	*Load above 90 % of I nominal*
LED green, flashing 5 Hz	*Overload*	*Load above 100 % of I nominal*
LED red	*OFF*	*Module switched off or acknowledged**
LED red, flashing 1 Hz	*Overload*	*Output off due to overload/short circuit**
LED red, flashing 5 Hz	*Error*	*Wiring error – feedback (internal error)*
LED red, flashing shortly	*OFF*	*Output off via remote set/reset*
LED red/green, flashing 1 Hz	*ON*	*Target settings via rotary switch deviate from actual settings.* ***NOTICE: Switching off and on via pushbutton required.***
*Button ****	*ON/OFF*	*Nominal operation: ON/OFF* *Load monitoring tripped: 1st push: acknowledge* *2nd push: ON*
*Rotary Switch (I) – Switch Position***	*Rated current, see page 4.*	
*Rotary Switch (C) – Switch Position***	*Characteristic: 1: fast 2: middle* *3: slow-1 4: slow-2 5: slow-3*	

** If the operating voltage is switched off, the last status is saved (Default).*
button, not by Remote Set/Reset
nly be switched on

ructions

Signal output

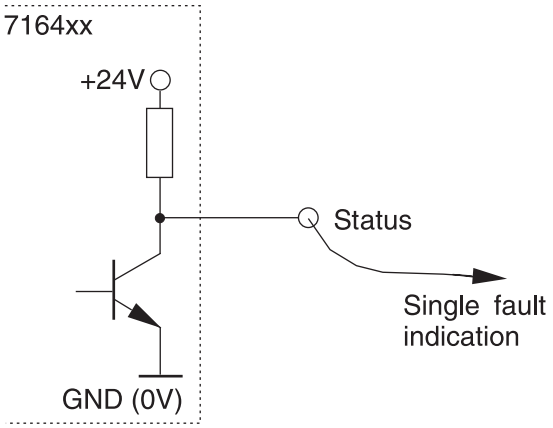

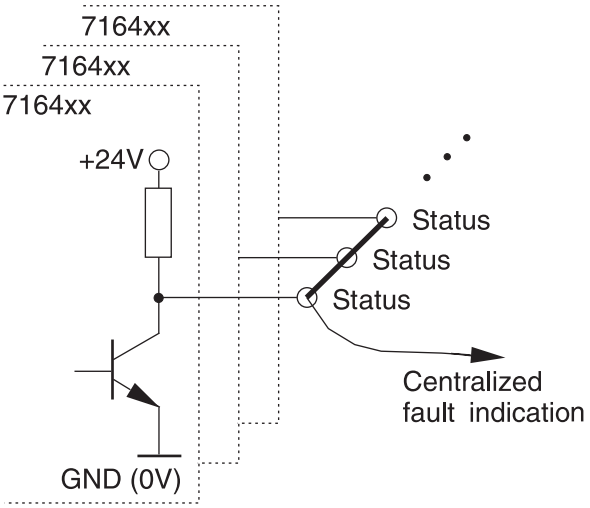

Mounting diagram

HINWEIS / NOTICE / AVIS

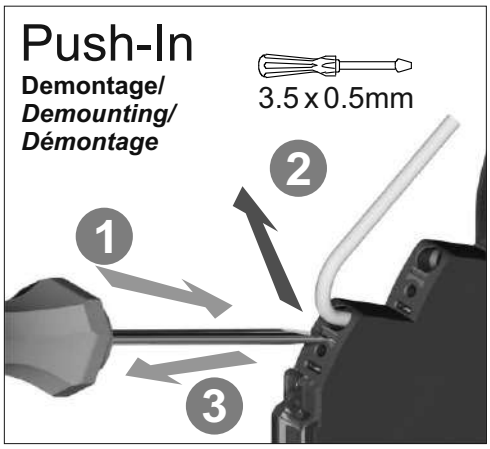

Technical data sheet

Load monitoring · LOCC-Box-NetK

Electronic load monitoring up to DC 10 A, with communication
Single-channel design, programmable, Adjustable current range: DC 1 A – 10 A
Adjustable characteristics, fast, medium, slow 1, -2, -3

Identification

Type	LOCC-Box-NetK 7-6416
Part No.	716416.002.1

Product version

Hardware revision	2.0
Software version	2.6
Datasheet version	03

Input

Type of function	1-channel 1 pin switching
Rated voltage U_N	DC 12/24 V
Operation voltage range	DC 10–30 V
Rated current I_N	DC 10 A
Reverse voltage protection	Internal electronics

Control input (Set / Reset)

Signal level	DC 12/24 V acc. to IEC 61131-2
OFF	Pulse with falling edge >100 ms, <800 ms
ON	Pulse with falling edge > 1 s

Output

Switching element	MOSFET
Output current	Max. DC 10 A
Voltage drop	Max. 215 mV (10 A)

Status display output	LED green: operating voltage present, no error LED red: error in load circuit
Switch-on capacity	10000 µF
Current range	1 A – 10 A (adjustable via switch in 1 A steps)
Characteristic	Fast (1), medium (2), slow 1 (3), slow 2 (4), slow 3 (5), can be configured (19) see ’characteristic curves’

Signal output

Signal level	DC 12/24 V: operating voltage on standby, no error, DC 0 V: error, output switched off, and manual "OFF" (parameterized)
Switching element	Transistor, collector with pull-up resistance

General

Dimensions (w × h × d)	8.1 mm × 114.5 mm × 116.0 mm
Housing material	PA 6.6 (UL 94 V-0, NFF I2, F2)
Color of the housing	Basalt grey
Mounting	DIN rail mountable TS35 (EN 60715)
Installation position	Any
MTBF	690000 h
Degree of protection	IP20 (only as complete system with supply terminal and end block)
Connection type	Push-In 0.25 mm² – 2.5 mm² AWG 24 – AWG 14
Weight/unit	0.07 kg
PU (units)	1

General ambient conditions

Operation temperature range	-25 °C … +50 °C
Storage temperature range	-40 °C … +85 °C
Relative air humidity	10 % – 95 %, without condensation
Vibration resistance	4 g acc. to EN 60068-2-6
Shock resistance	15 g acc. EN 60068-2-27

Certifications/Standards

Conformity	CE UKCA
Certifications	cULus (E135145) URus (E490188)
Standards	EN 61000-6-2 EN 61000-6-3

Dimensions

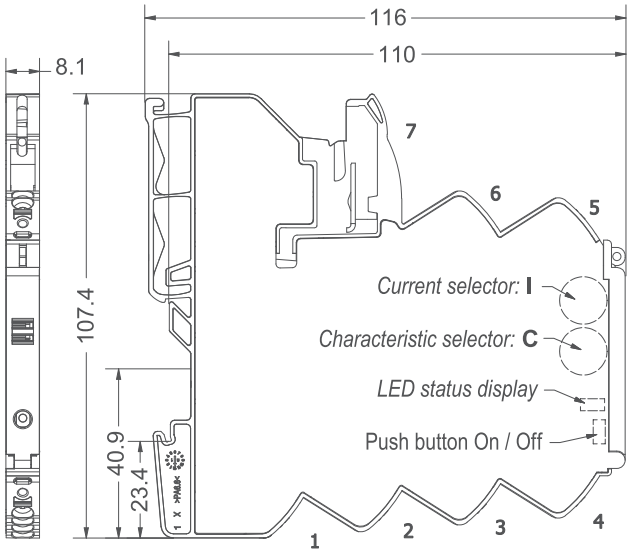

PIN assignment

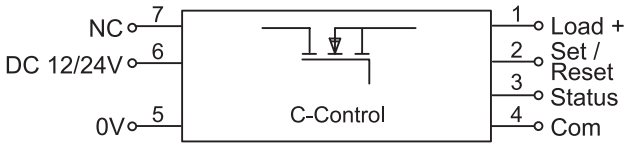

1: + Output
2: Control input (Set/Reset)
3: Status output
4: 1 Wire bus (Communication)
5: 0V
6: + Supply
7: not used

1: Characteristic fast

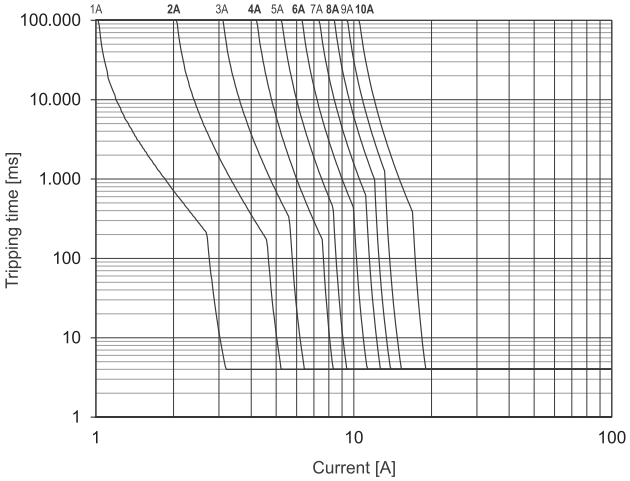

2: Characteristic medium

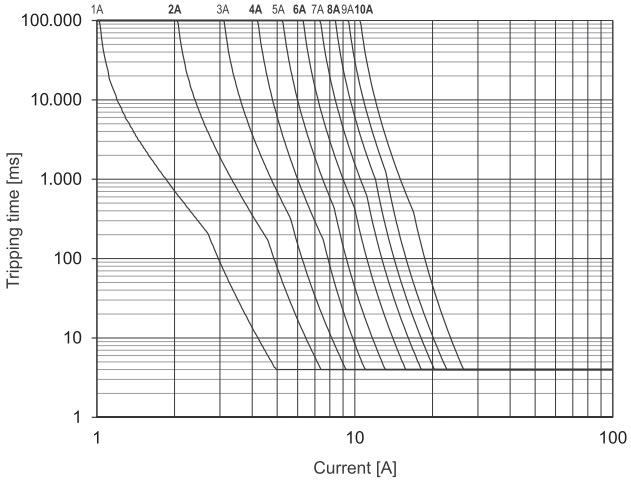

3: Characteristic slow-1

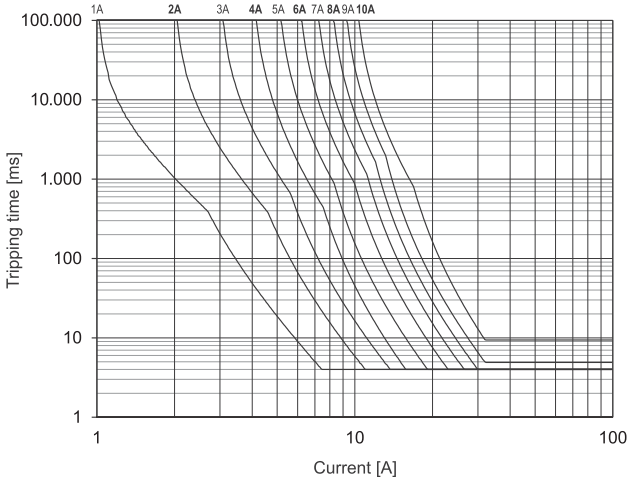

4: Characteristic slow-2

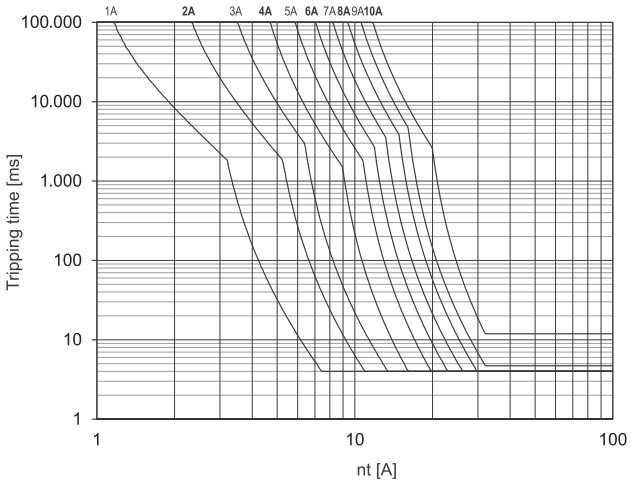

5: Characteristic slow-3

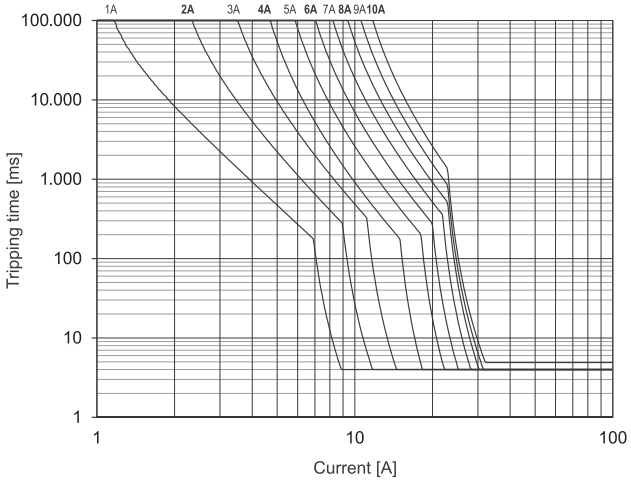

Use

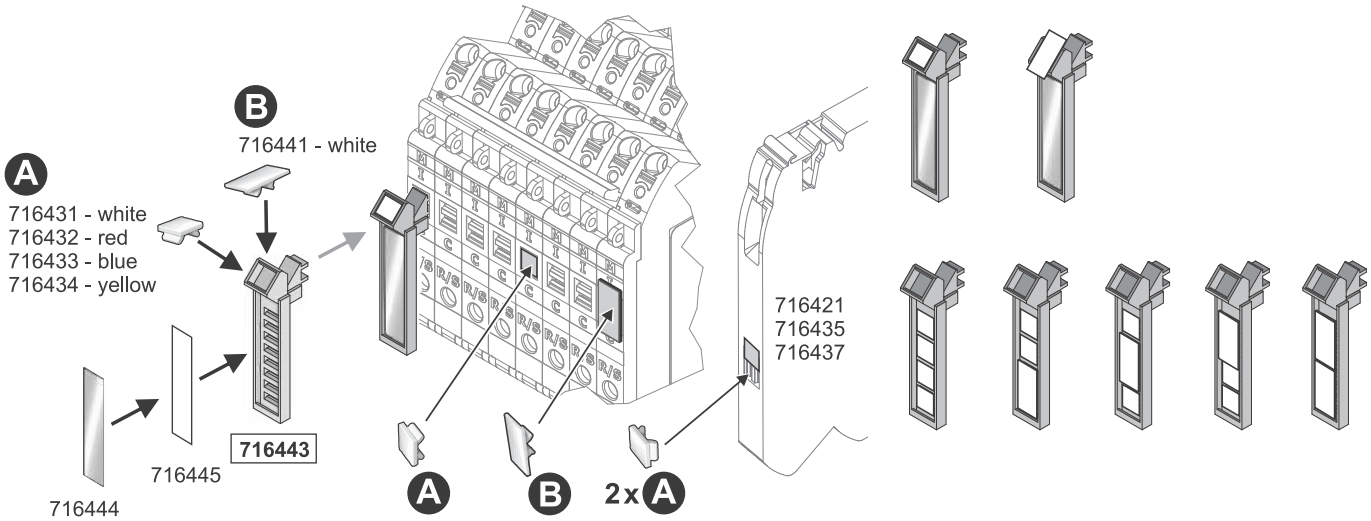

LED status

LED Status, Button, Rotary Switch

LED green	*ON*	*Function is OK**
LED green, flashing 1 Hz	*Overload*	*Load above 90 % of I nominal*
LED green, flashing 5 Hz	*Overload*	*Load above 100 % of I nominal*
LED red	*OFF*	*Module switched off or acknowledged**
LED red, flashing 1 Hz	*Overload*	*Output off due to overload/short circuit**
LED red, flashing 5 Hz	*Error*	*Wiring error – feedback (internal error)*
LED red, flashing shortly	*OFF*	*Output off via remote set/reset*
LED red/green, flashing 1 Hz	*ON*	*Target settings via rotary switch deviate from actual settings.* ***NOTICE: Switching off and on via pushbutton required.***
*Button ****	*ON/OFF*	*Nominal operation: ON/OFF* *Load monitoring tripped: 1st push: acknowledge* *2nd push: ON*
*Rotary Switch (I) – Switch Position***	*Rated current, see page 4.*	
*Rotary Switch (C) – Switch Position***	*Characteristic: 1: fast 2: middle* *3: slow-1 4: slow-2 5: slow-3*	

** If the operating voltage is switched off, the last status is saved (Default).*
button, not by Remote Set/Reset
nly be switched on

ructions

Signal output

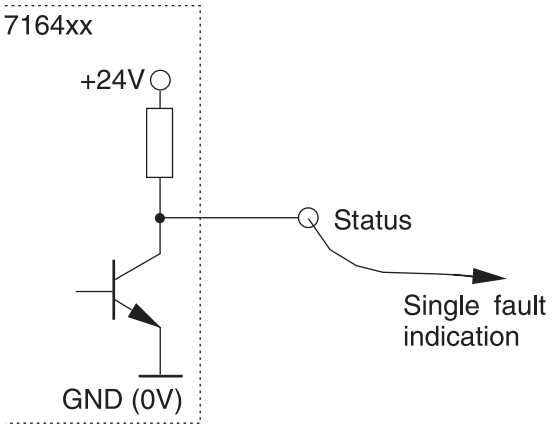

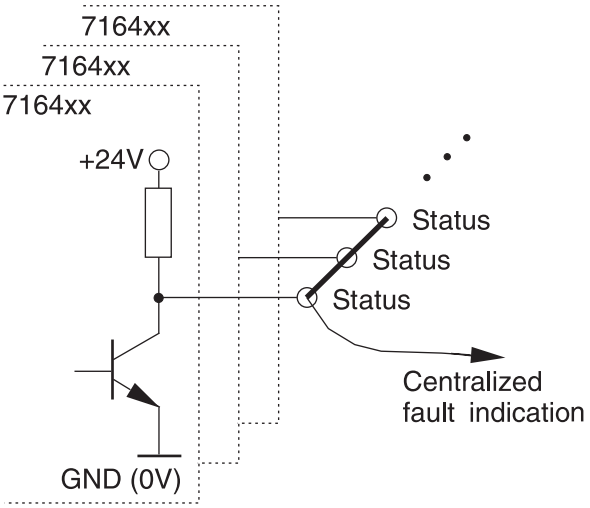

Mounting diagram

HINWEIS / NOTICE / AVIS

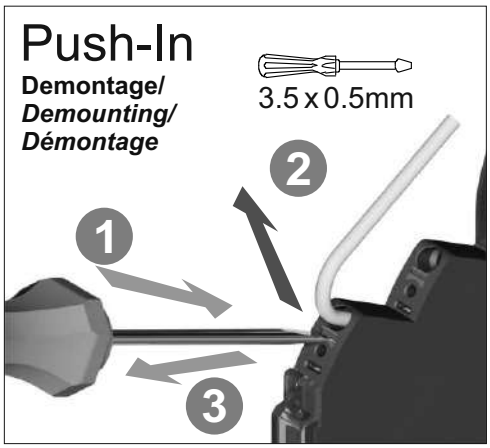

Technical data sheet

Load monitoring · LOCC-Box ECK

Electronic load monitoring up to DC 10 A
Single-channel design, Adjustable current range: DC 1 A – 10 A
Fixed Characteristics: slow-1

Identification

Type	LOCC-Box ECK I-C3
Part No.	716416.803.1

Product version

Hardware revision	2.0
Software version	2.6
Datasheet version	04

Input

Type of function	1-channel 1 pin switching
Rated voltage U_N	DC 12/24 V
Operation voltage range	DC 10–30 V
Rated current I_N	DC 10 A
Supply current	DC 40 A over Cu-rails 10 × 3 mm
Reverse voltage protection	Internal electronics

Output

Switching element	MOSFET
Output current	Max. DC 10 A
Voltage drop	Max. 215 mV (10 A)
Status display output	LED green: operating voltage present, no error LED red: error in load circuit
Switch-on capacity	10000 µF
Current range	1 A – 10 A (adjustable via switch in 1 A steps)
Characteristic	Slow 1 (3), fixed setting

Signal output

Signal level	DC 12/24 V: operating voltage on standby, no error, DC 0 V: error, output switched off and manual "OFF"
Switching element	Transistor, collector with pull-up resistance

General

Dimensions (w × h × d)	8.1 mm × 107.4 mm × 116.0 mm
Housing material	PA 6.6 (UL 94 V-0, NFF I2, F2)
Color of the housing	Basalt grey
Mounting	DIN rail mountable TS35 (EN 60715)
Installation position	Any
MTBF	690000 h
Degree of protection	IP20 (only as complete system with supply terminal and end block)
Connection type	Push-In 0.25 mm² – 2.5 mm² AWG 24 – AWG 14
Weight/unit	0.07 kg
PU (units)	1

General ambient conditions

Operation temperature range	-25 °C … +50 °C
Storage temperature range	-40 °C … +85 °C
Relative air humidity	10 % – 95 %, without condensation
Vibration resistance	4 g acc. to EN 60068-2-6
Shock resistance	15 g acc. EN 60068-2-27

Certifications/Standards

Conformity	CE UKCA
Certifications	cULus (E135145) URus (E490188)
Standards	EN 61000-6-2 EN 61000-6-3 UL 60947-5-1 UL 2367

Dimensions

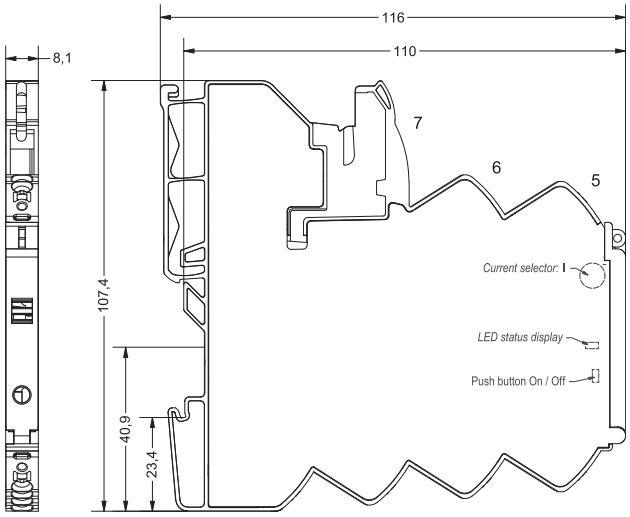

PIN assignment

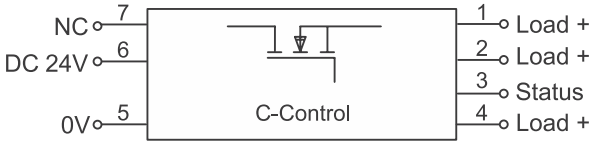

1: + Output
2: + Output
3: Status output
4: + Output
5: 0V
6: + Supply
7: not used

3: Characteristic slow-1

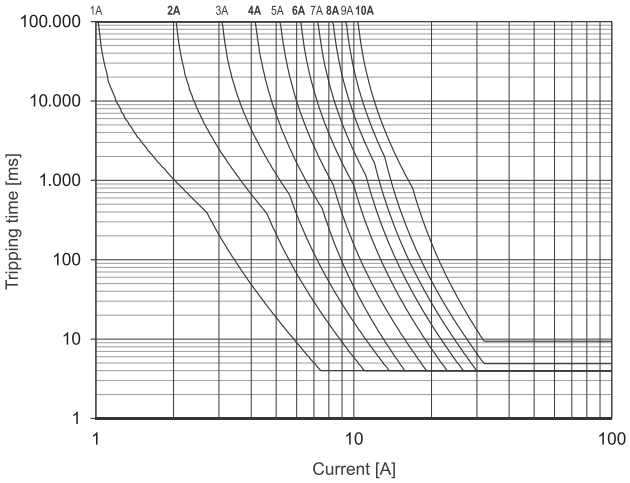

Use

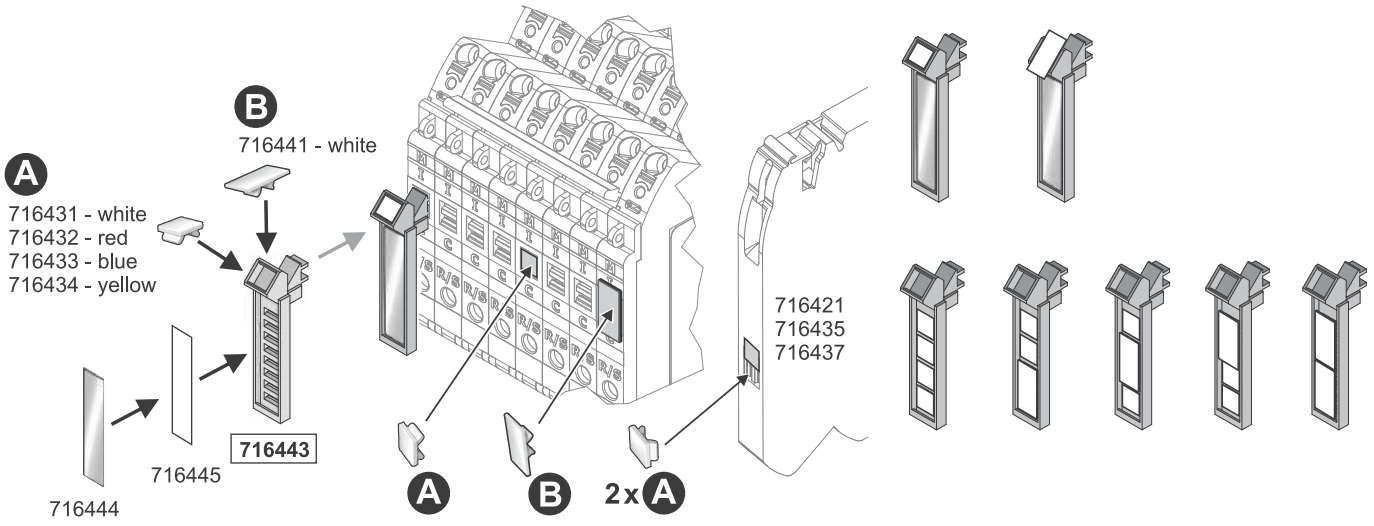

LED status

LED Status, Button, Rotary Switch

LED green	*ON*	*Function is OK**
LED green, flashing 1 Hz	*Overload*	*Load above 90 % of I nominal*
LED green, flashing 5 Hz	*Overload*	*Load above 100 % of I nominal*
LED red	*OFF*	*Module switched off or acknowledged**
LED red, flashing 1 Hz	*Overload*	*Output off due to overload/short circuit**
LED red, flashing 5 Hz	*Error*	*Wiring error – feedback (internal error)*
LED red, flashing shortly	*OFF*	*Output off via remote set/reset*
LED red/green, flashing 1 Hz	*ON*	*Target settings via rotary switch deviate from actual settings.* ***NOTICE: Switching off and on via pushbutton required.***
*Button ****	*ON/OFF*	*Nominal operation: ON/OFF* *Load monitoring tripped: 1st push: acknowledge* *2nd push: ON*
*Rotary Switch (I) – Switch Position***	*Rated current*	

** If the operating voltage is switched off, the last status is saved (Default).*
*** Accept the setting - after switching on again via the button, not by Remote Set/Reset*
**** Master function - switch off via push button, can only be switched on again via push button*

For further information see also the operating instructions

Signal output

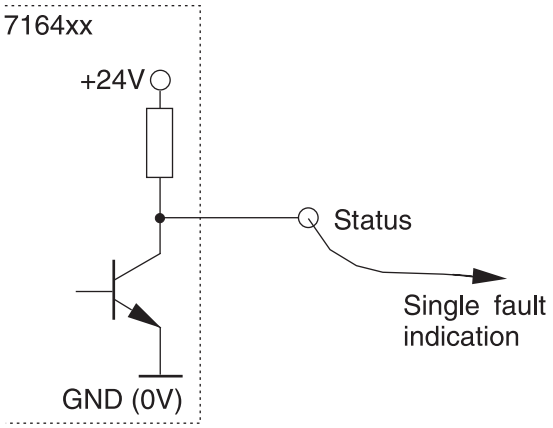

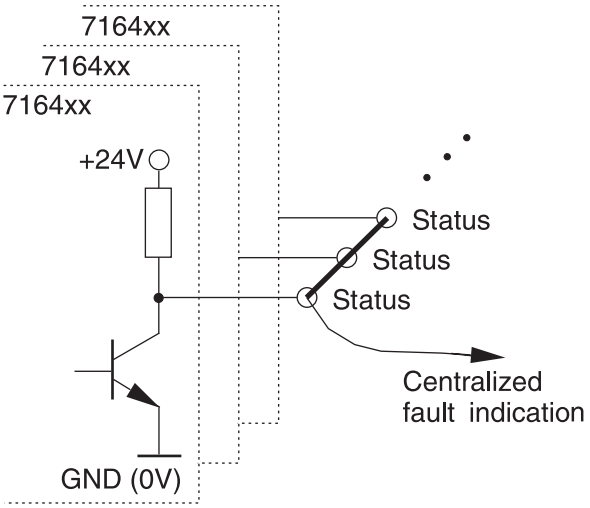

Mounting diagram

HINWEIS / NOTICE / AVIS

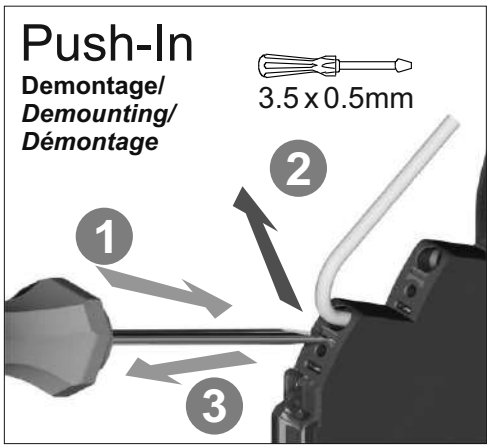

Technical data sheet

Load monitoring · LOCC-Box ECK

Electronic load monitoring up to DC 10 A
Single-channel design, Adjustable current range: DC 1 A – 10 A
Characteristics: slow-3

Identification

Type	LOCC-Box ECK I-C5
Part No.	716416.805.1

Product version

Hardware revision	2.0
Software version	2.6
Datasheet version	04

Input

Type of function	1-channel 1 pin switching
Rated voltage U_N	DC 12/24 V
Operation voltage range	DC 10–30 V
Rated current I_N	DC 10 A
Reverse voltage protection	Internal electronics

Output

Switching element	MOSFET
Output current	Max. DC 10 A
Voltage drop	Max. 215 mV (10 A)
Status display output	LED green: operating voltage present, no error LED red: error in load circuit
Switch-on capacity	10000 µF
Current range	1 A – 10 A (adjustable via switch in 1 A steps)
Characteristic	Slow, fixed setting

Signal output

Signal level	DC 12/24 V: operating voltage on standby, no error, DC 0 V: error, output switched off and manual "OFF"
Switching element	Transistor, collector with pull-up resistance

General

Dimensions (w × h × d)	8.1 mm × 107.4 mm × 116.0 mm
Housing material	PA 6.6 (UL 94 V-0, NFF I2, F2)
Color of the housing	Basalt grey
Mounting	DIN rail mountable TS35 (EN 60715)
Installation position	Any
MTBF	690000 h
Degree of protection	IP20 (only as complete system with supply terminal and end block)
Connection type	Push-In 0.25 mm² – 2.5 mm² AWG 24 – AWG 14
Weight/unit	0.07 kg
PU (units)	1

General ambient conditions

Operation temperature range	-25 °C … +50 °C
Storage temperature range	-40 °C … +85 °C
Relative air humidity	10 % – 95 %, without condensation
Vibration resistance	4 g acc. to EN 60068-2-6
Shock resistance	15 g acc. EN 60068-2-27

Certifications/Standards

Conformity	CE UKCA
Certifications	cULus (E135145) URus (E490188)
Standards	EN 61000-6-2 EN 61000-6-3 UL 60947-5-1 UL 2367

Dimensions

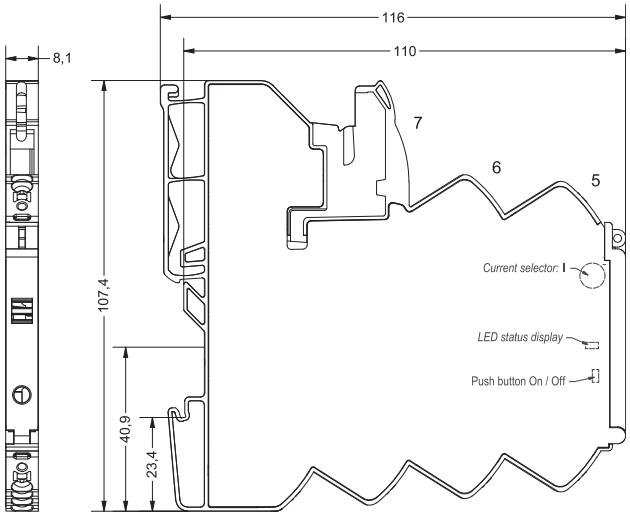

PIN assignment

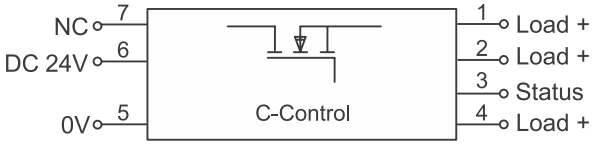

1: + Output
2: + Output
3: Status output
4: + Output
5: 0V
6: + Supply
7: not used

5: Characteristic slow-3

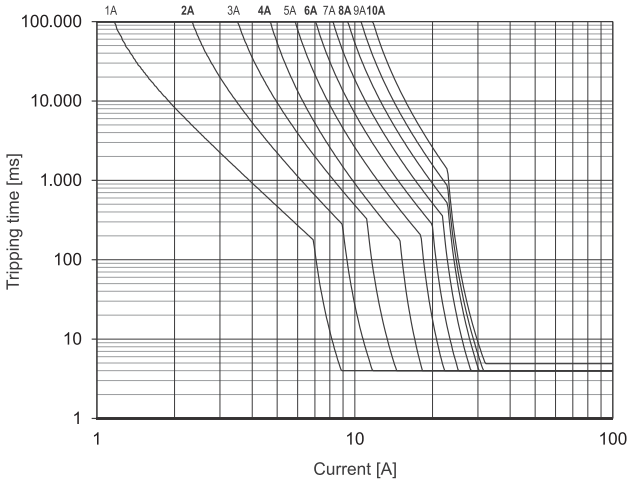

Use

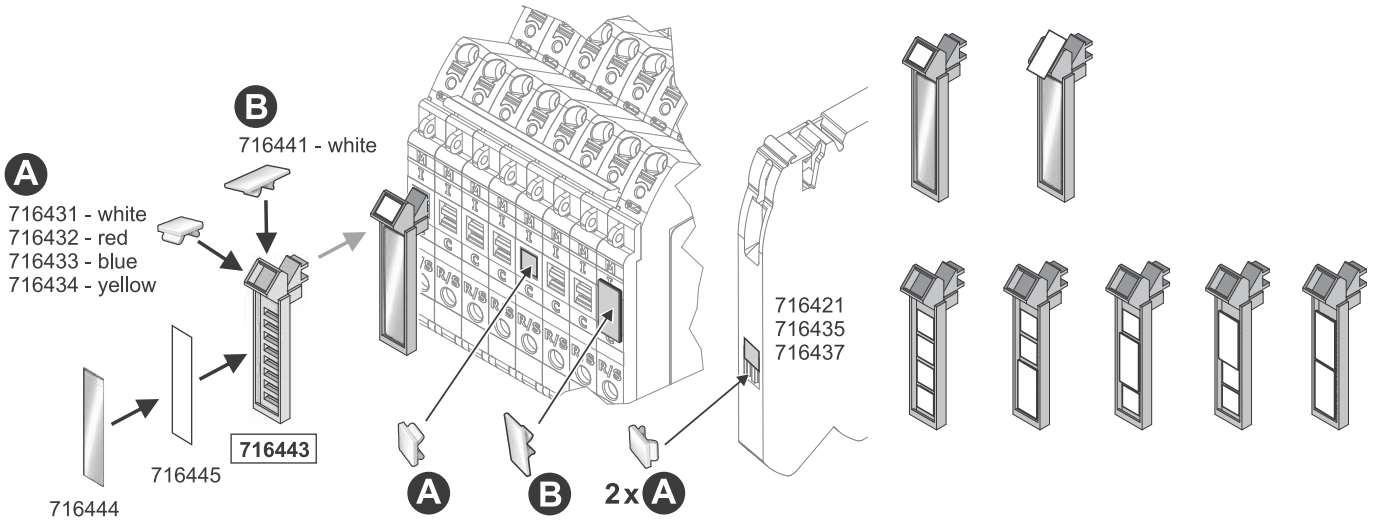

LED status

LED Status, Button, Rotary Switch

LED green	*ON*	*Function is OK**
LED green, flashing 1 Hz	*Overload*	*Load above 90 % of I nominal*
LED green, flashing 5 Hz	*Overload*	*Load above 100 % of I nominal*
LED red	*OFF*	*Module switched off or acknowledged**
LED red, flashing 1 Hz	*Overload*	*Output off due to overload/short circuit**
LED red, flashing 5 Hz	*Error*	*Wiring error – feedback (internal error)*
LED red, flashing shortly	*OFF*	*Output off via remote set/reset*
LED red/green, flashing 1 Hz	*ON*	*Target settings via rotary switch deviate from actual settings.* ***NOTICE: Switching off and on via pushbutton required.***
*Button ****	*ON/OFF*	*Nominal operation: ON/OFF* *Load monitoring tripped: 1st push: acknowledge* *2nd push: ON*
*Rotary Switch (I) – Switch Position***	*Rated current*	

** If the operating voltage is switched off, the last status is saved (Default).*
*** Accept the setting - after switching on again via the button, not by Remote Set/Reset*
**** Master function - switch off via push button, can only be switched on again via push button*

For further information see also the operating instructions

Signal output

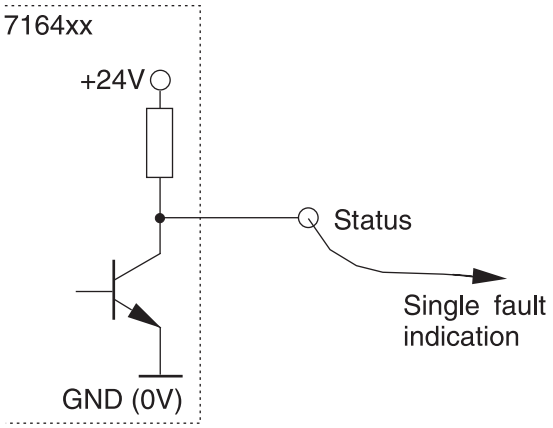

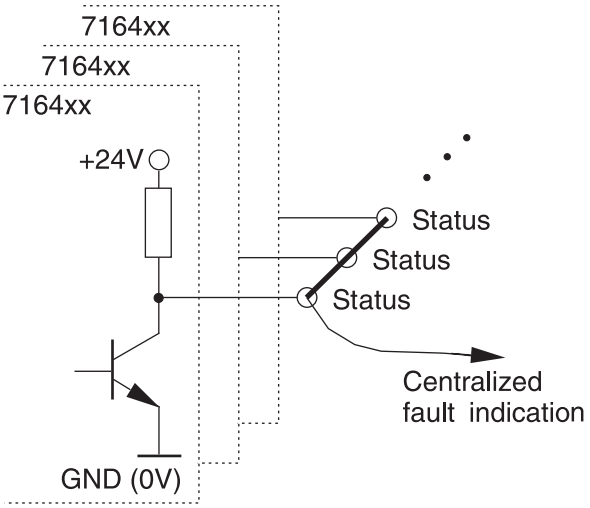

Mounting diagram

HINWEIS / NOTICE / AVIS

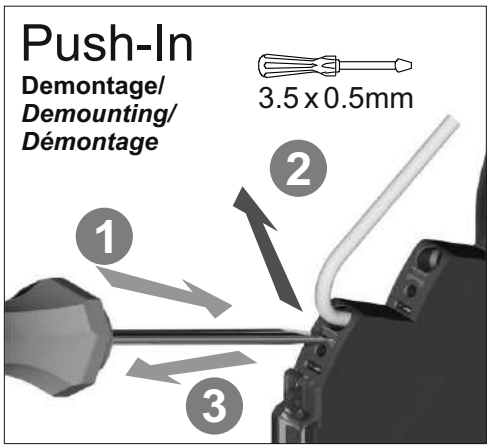

Technical data sheet

Load monitoring · LOCC-Box-EDK

Electronic load monitoring up to DC 6 A
Two-channel version; adjustable current range: DC 1 A - 6 A
Fixed characteristic: slow-1

Identification

Type	LOCC-Box EDK I-C3
Part No.	716416.903.1

Product version

Hardware revision	2.0
Software version	2.6
Datasheet version	05

Input

Type of function	2-channel 1 pin switching
Rated voltage U_N	DC 12/24 V
Operation voltage range	DC 10–30 V
Rated current I_N	DC 2 × 6 A
Supply current	DC 40 A
Reverse voltage protection	Internal electronics

Output

Ampacity	DC 2 × 6 A Total current
Switching element	MOSFET
Output current	Max. DC 6 A per channel
Voltage drop	Max. 115 mV (6 A, per channel)
Status display output	LED green: no error, LED green flashing: 90 % utilisation LED red flashing: triggered, LED red: unit off
Switch-on capacity	10000 µF
Current range	1 A – 6 A (adjustable via switch in 1 A steps)

Characteristic	Slow 1 (3), fixed setting

Signal output

Signal level	High level: no error Low level: unit has triggered or is switched off
Switching element	Transistor, collector with pull-up resistance

General

Dimensions (w × h × d)	8.1 mm × 107.4 mm × 116.0 mm
Housing material	PA 6.6 (UL 94 V-0, NFF I2, F2)
Color of the housing	RAL 7012 Basalt grey
Mounting	DIN rail mountable TS35 (EN 60715)
Installation position	Any
MTBF	690000 h @ 40 °C, 100 operations button, 30 revolutions coding switch
Degree of protection	IP20 (only as complete system with supply terminal and end block)
Connection type	Push-In 0.25 mm² – 2.5 mm² AWG 24 – AWG 14
Weight/unit	0.07 kg
PU (units)	1

General ambient conditions

Operation temperature range	-25 °C … +50 °C
Storage temperature range	-40 °C … +85 °C
Relative air humidity	10 % – 95 %, without condensation
Vibration resistance	4 g acc. to EN 60068-2-6
Shock resistance	15 g acc. EN 60068-2-27

Certifications/Standards

Conformity	CE UKCA
Certifications	cULus (E135145) URus (E490188)
Standards	EN 61000-6-2 EN 61000-6-3 UL 60947-5-1 UL 2367

Dimensions

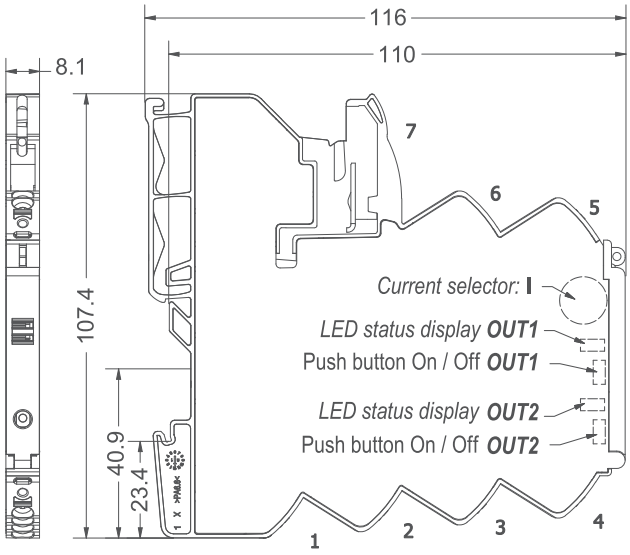

PIN assignment

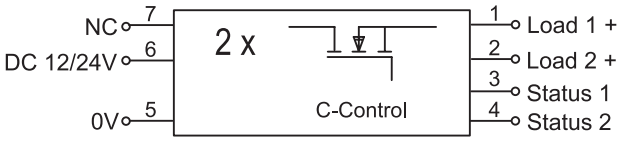

1: + Output 1
2: + Output 2
3: Status output 1
4: Status output 2
5: 0V
6: + Supply
7: not used

3: Characteristic slow-1

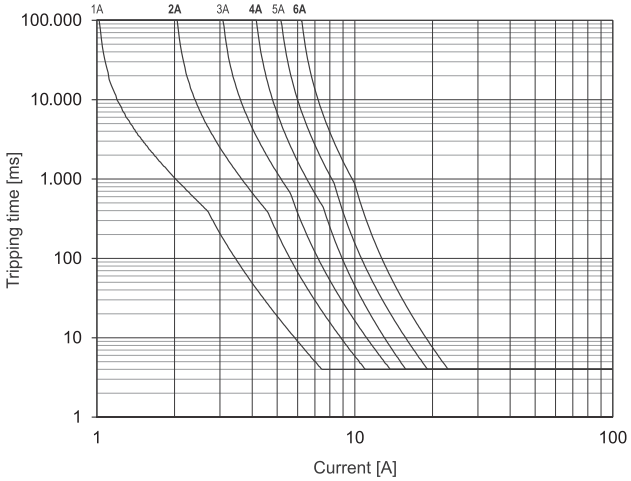

Use

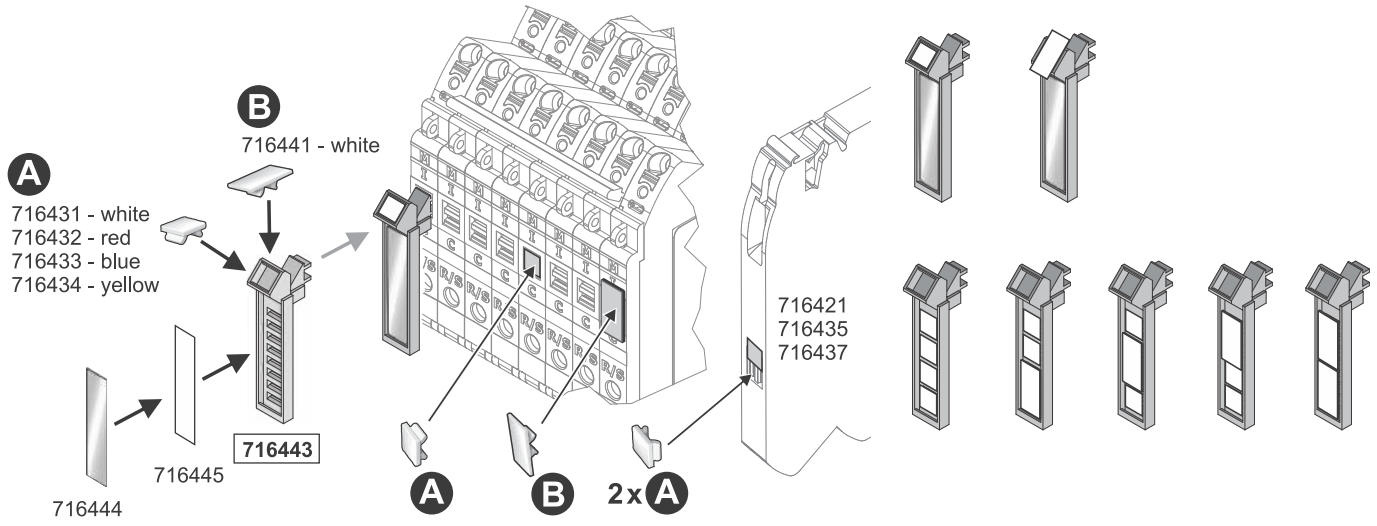

LED status

LED Status, Button, Rotary Switch

LED green	*ON*	*Function is OK**
LED green, flashing 1 Hz	*Overload*	*Load above 90 % of I nominal*
LED green, flashing 5 Hz	*Overload*	*Load above 100 % of I nominal*
LED red	*OFF*	*Module switched off or acknowledged**
LED red, flashing 1 Hz	*Overload*	*Output off due to overload/short circuit**
LED red, flashing 5 Hz	*Error*	*Wiring error – feedback (internal error)*
LED red, flashing shortly	*OFF*	*Output off via remote set/reset*
LED red/green, flashing 1 Hz	*ON*	*Target settings via rotary switch deviate from actual settings.* ***NOTICE: Switching off and on via pushbutton required.***
*Button ****	*ON/OFF*	*Nominal operation: ON/OFF* *Load monitoring tripped: 1st push: acknowledge* *2nd push: ON*
*Rotary Switch (I) – Switch Position***	*Rated current*	

** If the operating voltage is switched off, the last status is saved (Default).*
*** Accept the setting - after switching on again via the button, not by Remote Set/Reset*
**** Master function - switch off via push button, can only be switched on again via push button*

For further information see also the operating instructions

Signal output

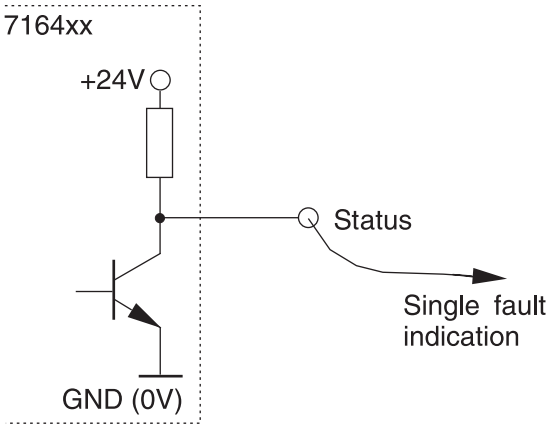

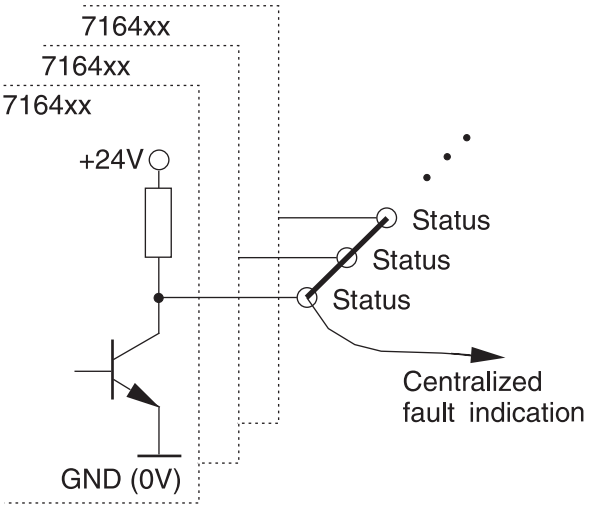

Mounting diagram

HINWEIS / NOTICE / AVIS

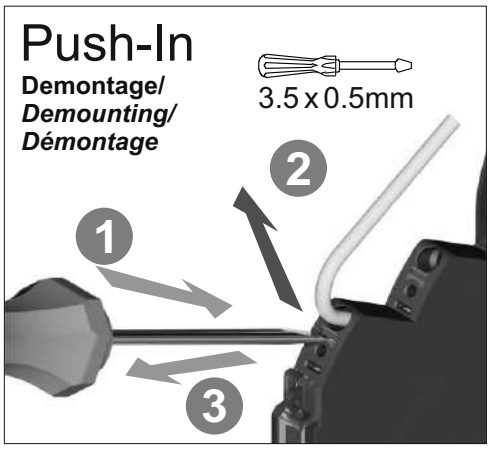

Technical data sheet

Load monitoring · LOCC-Box-NET-SC

Electronic circuit breaker rated up to DC 5 A, with communication
Single-channel design, adjustable current range: DC 1 A – 5 A
Adjustable characteristics, fast, medium-speed, slow 1

Identification

Type	LOCC-Box-Net-SC 7-6418
Part No.	716418

Product version

Hardware revision	2.0
Software version	2.6
Datasheet version	02

Input

Type of function	1-channel 1 pin switching
Rated voltage U_N	DC 12/24 V
Operation voltage range	DC 10–30 V
Rated current I_N	DC 5 A
Supply current	DC 40 A over Cu-rails 10 × 3 mm
Reverse voltage protection	Internal electronics
Connection type input	Screwless contact slide

Control input (Set / Reset)

Signal level	DC 12/24 V acc. to EN 61131
OFF	Pulse with falling edge >100 ms, <800 ms
ON	Pulse with falling edge > 1 s

Output

Switching element	MOSFET

Output current	Max. DC 5 A
Voltage drop	Max. 90 mV (5 A)
Status display output	LED green: operating voltage present, no error LED red: error in load circuit
Switch-on capacity	Optional
Current range	1 A – 5 A (adjustable via switch in 1 A steps)
Characteristic	Fast (1), medium (2), slow 1 (3) see ’characteristic curves’

Signal output

Signal level	DC 12/24 V: operating voltage on standby, no error, DC 0 V: error, output switched off, and manual "OFF" (parameterized)
Switching element	Transistor, collector with pull-up resistance

General

Dimensions (w × h × d)	8.1 mm × 107.4 mm × 116.0 mm
Housing material	PA 6.6 (UL 94 V-0, NFF I2, F2)
Color of the housing	Basalt grey
Mounting	DIN rail mountable TS35 (EN 60715)
Installation position	Any
MTBF	690000 h
Degree of protection	IP20 (only as complete system with power terminal and end block)
Connection type	Push-In 0.25 mm² – 2.5 mm² AWG 24 – AWG 14
Weight/unit	0.07 kg
PU (units)	1

General ambient conditions

Operation temperature range	-25 °C . . . +50 °C
Storage temperature range	-40 °C . . . +85 °C
Relative air humidity	10 % – 95 %, without condensation
Vibration resistance	4 g acc. to EN 60068-2-6
Shock resistance	15 g acc. EN 60068-2-27

Certifications/Standards

Conformity	CE UKCA
Certifications	cULus (E135145) URus (E490188)

Technical data sheet

Load monitoring · LOCC-Box-NET-SC

Standards	EN 61000-6-2 EN 61000-6-3 UL 60947-5-1 UL 2367 DNVGL-CG-0339 Temperature Class D – not certified Humidity Class B – not certified Vibration Class B – not certified EMC Class A – not certified Enclosure Class A – not certified

Dimensions

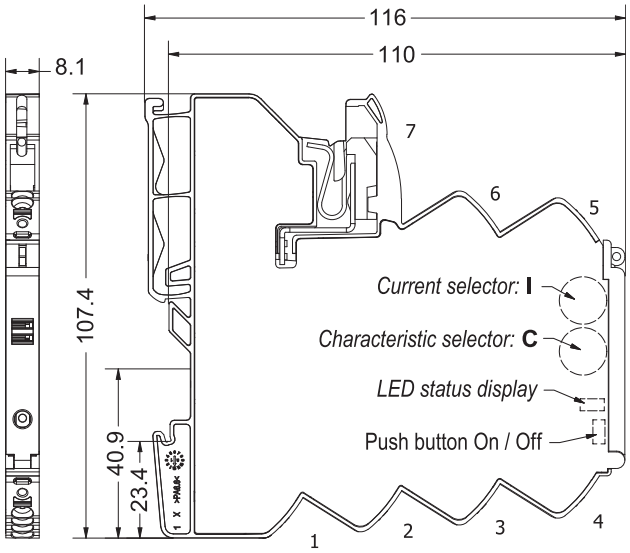

PIN assignment

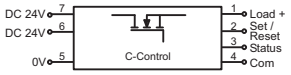

1: + Output
2: Control input (Set/Reset)
3: Status output
4: 1 Wire bus (Communication)
5: 0V
6: + Supply (alternative)
7: + Supply

1: Characteristic fast

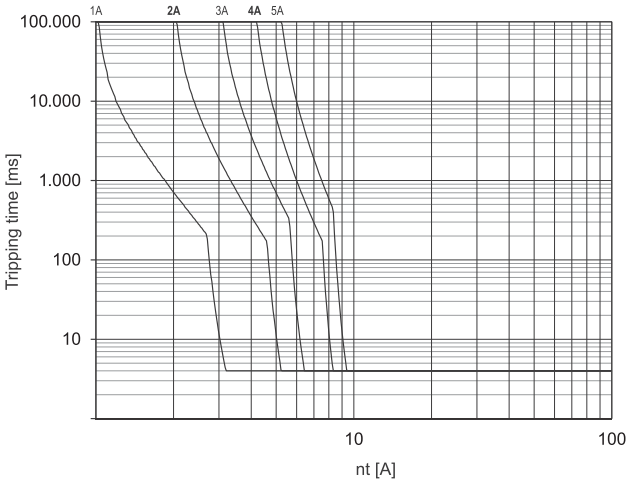

2: Characteristic medium

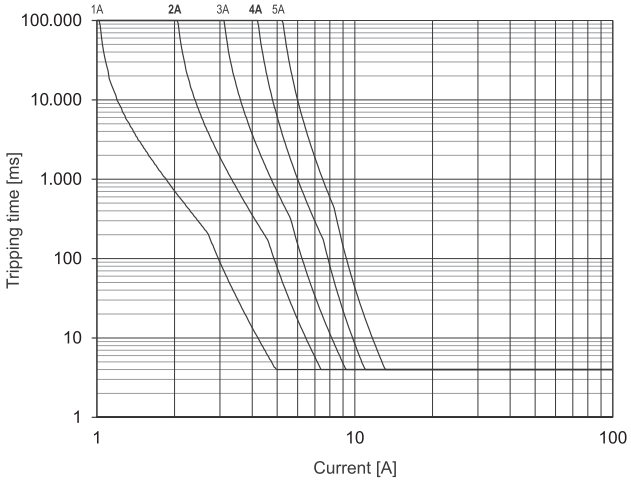

3: Characteristic slow-1

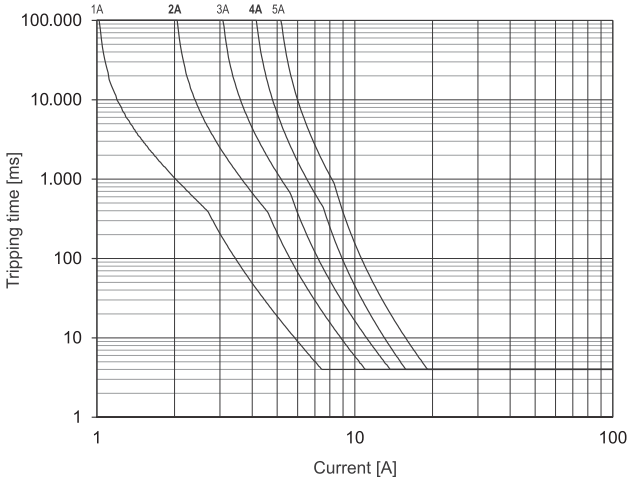

Use

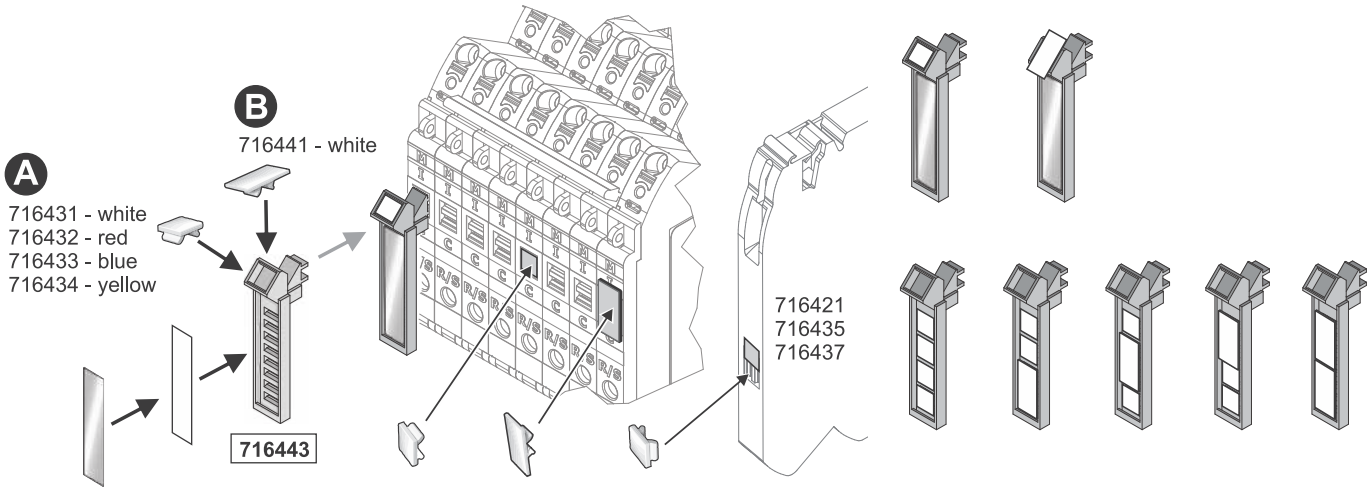

LED status

LED Status, Button, Rotary Switch

LED green	*ON*	*Function is OK**
LED green, flashing 1 Hz	*Overload*	*Load above 90 % of I nominal*
LED green, flashing 5 Hz	*Overload*	*Load above 100 % of I nominal*
LED red	*OFF*	*Module switched off or acknowledged**
LED red, flashing 1 Hz	*Overload*	*Output off due to overload/short circuit**
LED red, flashing 5 Hz	*Error*	*Wiring error – feedback (internal error)*
LED red, flashing shortly	*OFF*	*Output off via remote set/reset*
LED red/green, flashing 1 Hz	*ON*	*Target settings via rotary switch deviate from actual settings.* ***NOTICE: Switching off and on via pushbutton required.***
*Button ****	*ON/OFF*	*Nominal operation: ON/OFF* *Load monitoring tripped: 1st push: acknowledge* *2nd push: ON*
*Rotary Switch (I) – Switch Position***	*Rated current, see page 4.*	
*Rotary Switch (C) – Switch Position***	*Characteristic: 1: fast 2: middle* *3: slow-1 4: slow-2 5: slow-3*	

** If the operating voltage is switched off, the last status is saved (Default).*
*** Accept the setting - after switching on again via the button, not by Remote Set/Reset*
**** Master function - switch off via push button, can only be switched on again via push button*

For further information see also the operating instructions

Signal output

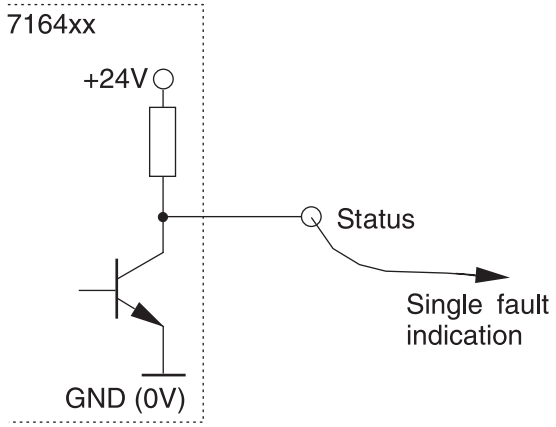

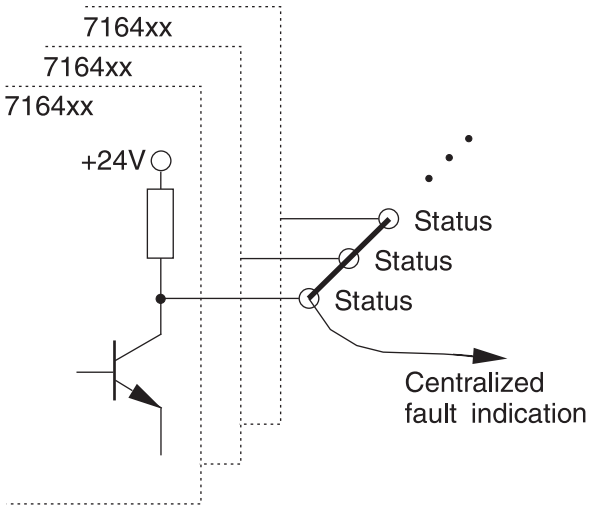

Mounting diagram

HINWEIS / NOTICE / AVIS

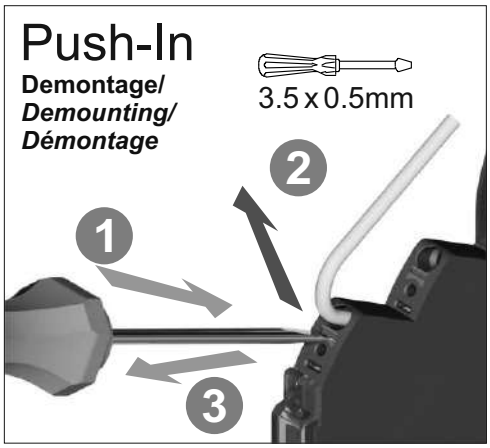

Technical data sheet

Load monitoring · LOCC-Box-EDNet

Electronic circuit breaker rated up to DC 6 A, with communication
Two-channel version, adjustable current range: DC 1 A - 6 A
Fixed characteristic: slow-1 (C3)

Identification

Type	LOCC-Box-EDNet I-C3
Part No.	716419.0300

Product version

Hardware revision	2.0
Software version	2.6
Datasheet version	01

Input

Type of function	2-channel 1 pin switching
Rated voltage U_N	DC 12/24 V
Operation voltage range	DC 10–30 V
Rated current I_N	DC 2 × 6 A
Supply current	DC 40 A
Reverse voltage protection	Internal electronics
Connection type input	Screwless contact slide

Output

Ampacity	DC 2 × 6 A Total current
Switching element	MOSFET
Output current	Max. DC 6 A per channel
Voltage drop	Max. 125 mV (6 A, per channel)
Status display output	LED green: no error, LED green flashing: 90 % utilisation LED red flashing: triggered, LED red: unit off
Switch-on capacity	10000 µF

Current range	1 A – 6 A (adjustable via switch in 1 A steps)
Characteristic	Slow 1 (3), fixed setting

Signal output

Signal level	High level: no error Low level: unit has triggered or is switched off
Switching element	Transistor, collector with pull-up resistance

General

Dimensions (w × h × d)	8.1 mm × 107.4 mm × 116.0 mm
Housing material	PA 6.6 (UL 94 V-0, NFF I2, F2)
Color of the housing	RAL 7012 Basalt grey
Mounting	DIN rail mountable TS35 (EN 60715)
Installation position	Any
MTBF	690000 h @ 40 °C, 100 operations button, 30 revolutions coding switch
Degree of protection	IP20 (only as complete system with supply terminal and end block)
Connection type	Push-In 0.25 mm² – 2.5 mm² AWG 24 – AWG 14
Weight/unit	0.07 kg
PU (units)	1

General ambient conditions

Operation temperature range	-25 °C … +50 °C
Storage temperature range	-40 °C … +85 °C
Relative air humidity	10 % – 95 %, without condensation
Vibration resistance	4 g acc. to EN 60068-2-6
Shock resistance	15 g 11 ms acc. to EN 60068-2-27:2009

Certifications/Standards

Conformity	CE UKCA
Certifications	cULus (E135145) URus (E490188)
Standards	EN 61000-6-2 EN 61000-6-3 UL 60947-5-1 UL 2367 DNVGL-CG-0339 Temperature Class D – not certified certified certified certified

Dimensions

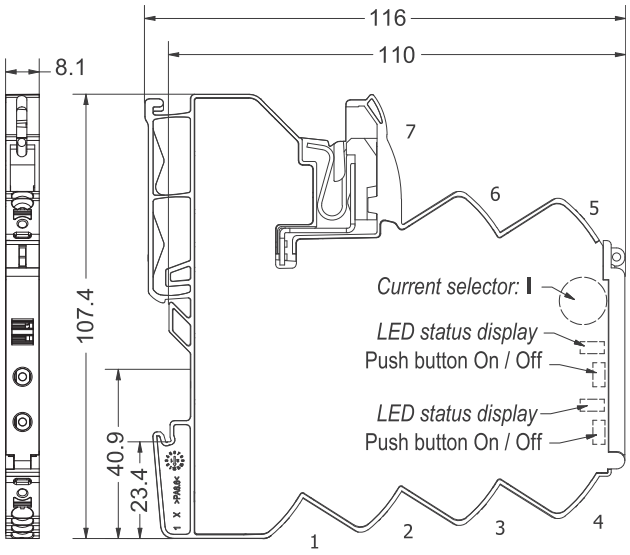

PIN assignment

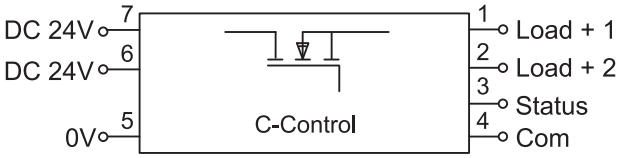

3: Characteristic slow-1

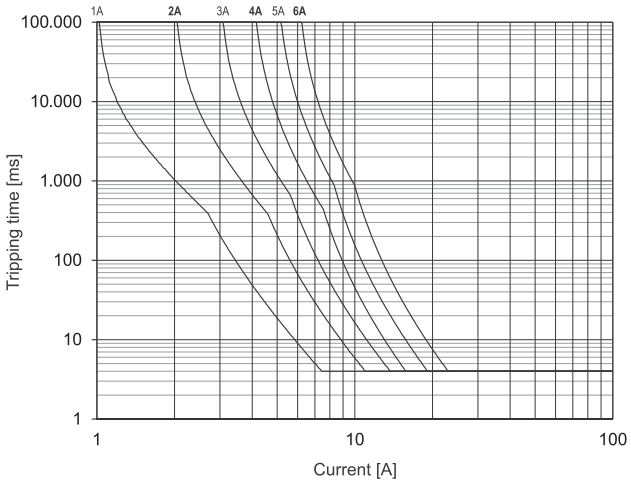

Use

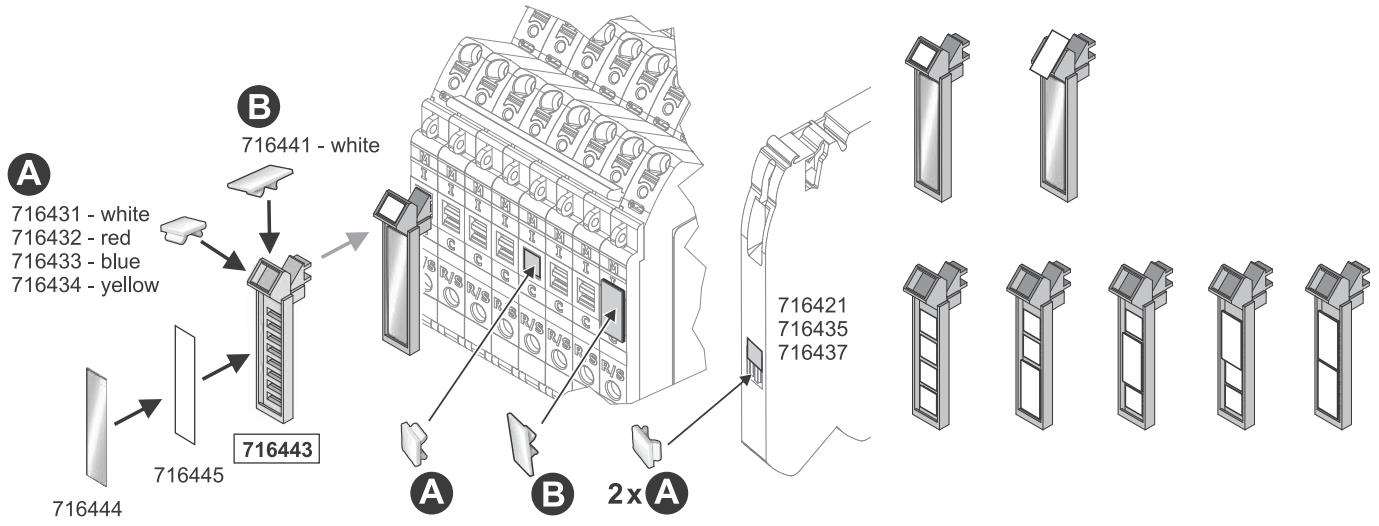

Signal output

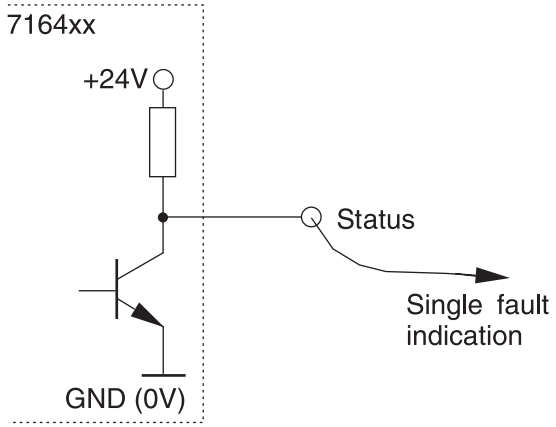

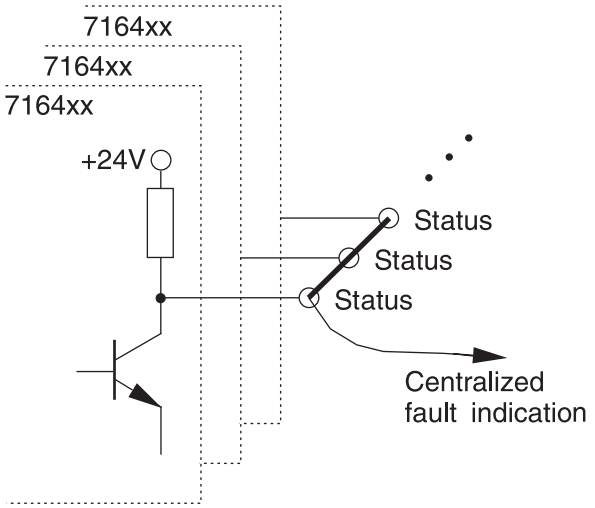

LOCC-Box 0V Collective Terminal
Maximum total current 40 A

Identification

Type	LOCC-Box-SK 7-6420
Part No.	716420

Product version

Hardware revision	2.0
Datasheet version	02

Input

Rated voltage U_N	DC 12/24 V
Rated current I_N	6 × max. DC 10 A
Reverse voltage protection	No
Connection type input	Screwless contact slide

Output

Output current	Max. DC 40 A

General

Accessories	0 V collective terminal
Connection type	Push-In 0.25 mm² – 2.5 mm² AWG 24 – AWG 14
Housing material	PA 6.6 (UL 94 V-0, NFF I2, F2)
Mounting	DIN rail mountable TS35 (EN 60715)
Degree of protection	IP20 (only as complete system with supply terminal and end block)

Installation position	Any
Dimensions (w × h × d)	8.1 mm × 107.4 mm × 116.0 mm
Weight/unit	0.102 kg
PU (units)	2

General ambient conditions

Operation temperature range	-25 °C … +50 °C
Storage temperature range	-40 °C … +85 °C
Relative air humidity	10 % – 95 %, without condensation
Vibration resistance	4 g acc. to EN 60068-2-6
Shock resistance	15 g acc. EN 60068-2-27

Certifications/Standards

Certifications	cULus (E135145)
Standards	EN 60947-1 EN 60947-5-1 UL 60947-5-1 DNVGL-CG-0339 Temperature Class D – not certified Humidity Class B – not certified Vibration Class B – not certified Enclosure Class A – not certified

Dimensions

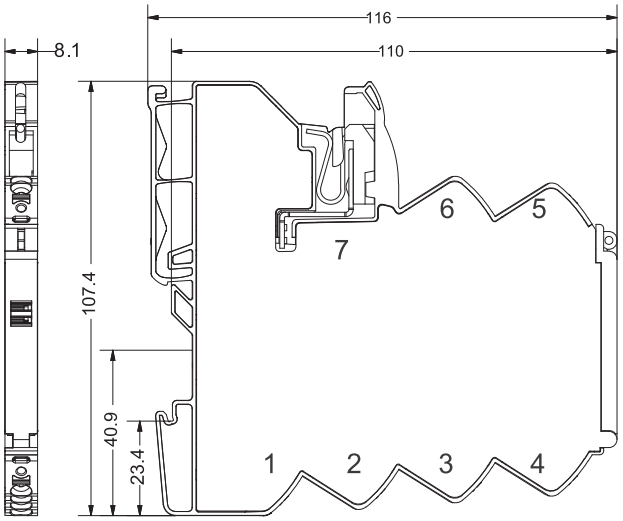

PIN assignment

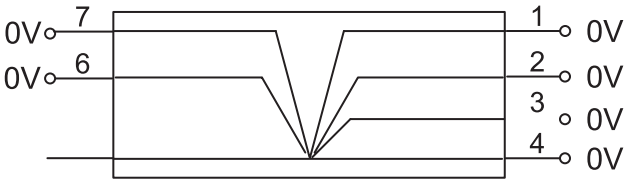

Use

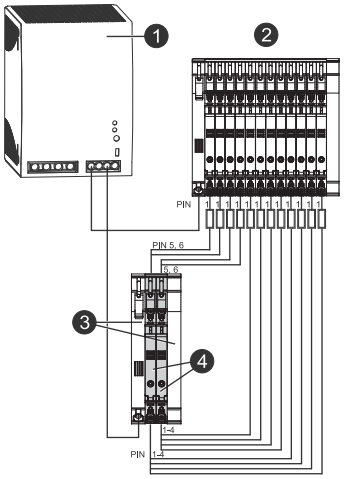

DE
1 Netzteil
2 LOCC-Box Module mit Einspeiseset
3 Einspeiseset mit Stromschiene
4 Sammelklemme 0 V (716420 LOCC-Box-SK 7-6420)

EN
1 Power Supply
2 LOCC-Box Modules with Supply Set
3 Supply Set with power rail
4 Collective Terminal 0 V (716420 LOCC-Box-SK 7-6420)

FR
1 Bloc d'alimentation
2 LOCC-Box modules avec kit d'alimentation
3 Kit d'alimentation avec rail électrique
4 Borne collectrice 0 V (716420 LOCC-Box-SK 7-6420)

Use

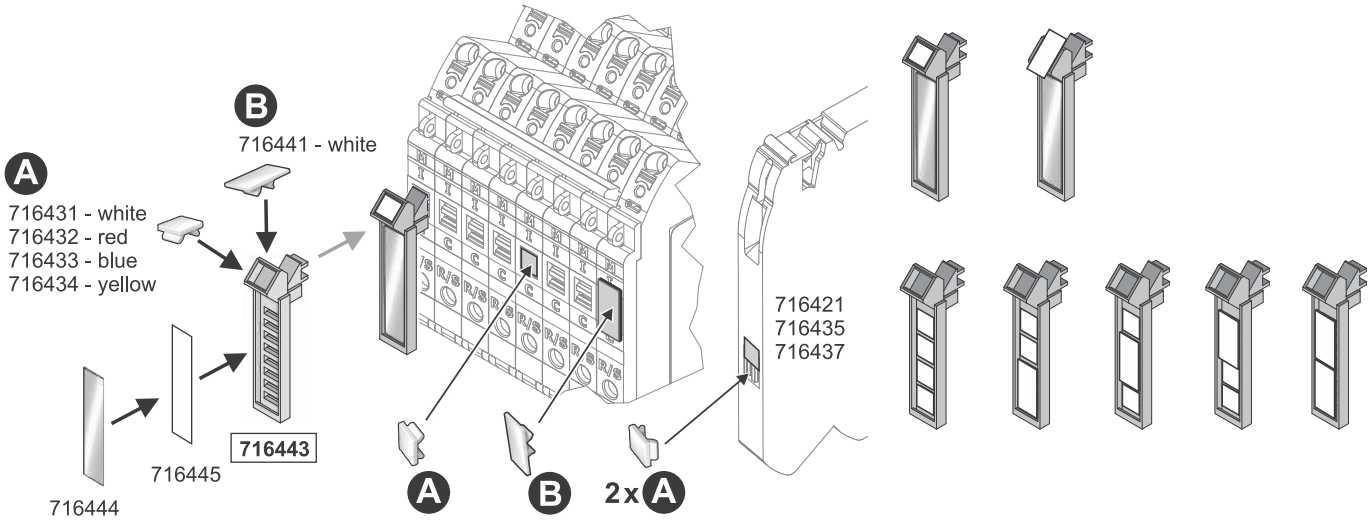

Mounting diagram

HINWEIS / NOTICE / AVIS

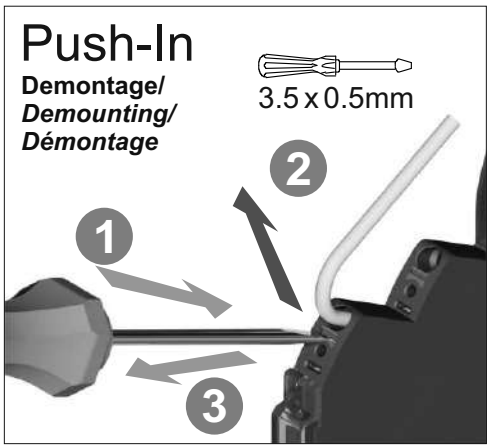

Technical data sheet

Load monitoring · LOCC-Box Accessories

LOCC-Box supply terminal
Additional supply terminal for increased current
Maximum total current 40 A (UL: 35 A)

Identification

Type	LOCC-Box-EKL 7-6421
Part No.	716421

Product version

Hardware revision	2.0
Datasheet version	02

Input

Rated current I_N	Max. DC 40 A
Reverse voltage protection	No
Connection type input	Push-In 0.5 mm² – 10 mm² UL Values/stranded AWG 14 – AWG 8
Conductor connection cross section	Single-wire: max. 10 mm² Finely stranded: max 10 mm² Finely stranded with AEH: max 6 mm²
Strip length	13 mm

Output

Rated voltage U_N	DC 12/24 V
Output current	Max. DC 40 A
Connection type output	Screwless contact slide
Copper bus bar	3 × 10mm

General

Accessories	Intermediate feed-in terminal
Connection type	Push-In Single wire/fine wire 0.50 mm² – 10.0 mm² AWG 22 – AWG 7 Fine stranded wire with ferrule Finely stranded, ferrule with plastic collar 0.5 mm² – 6 mm² AWG 22 – AWG 9 UL Values AWG 14 – AWG 8
Strip length	13 mm
Housing material	PA 6.6 (UL 94 V-0, NFF I2, F2)
Mounting	DIN rail mountable TS35 (EN 60715)
Degree of protection	IP20 (only as complete system with supply terminal, end block and copper rail cover)
Installation position	Any
Dimensions (w × h × d)	10.0 mm × 110.0 mm × 62.0 mm
Weight/unit	0.035 kg
PU (units)	2

General ambient conditions

Operation temperature range	-25 °C … +50 °C
Storage temperature range	-40 °C … +85 °C
Relative air humidity	10 % – 95 %, without condensation
Vibration resistance	4 g acc. to EN 60068-2-6
Shock resistance	15 g acc. EN 60068-2-27

Certifications/Standards

Certifications	cULus (E135145)
Standards	UL 60947-5-1 DNVGL-CG-0339 Temperature Class D – not certified Humidity Class B – not certified Vibration Class B – not certified Enclosure Class A – not certified

Dimensions

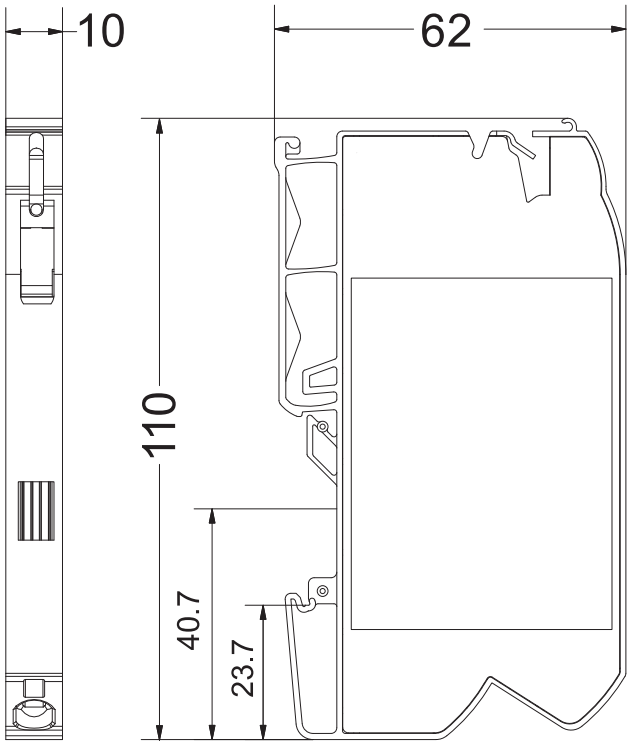

PIN assignment

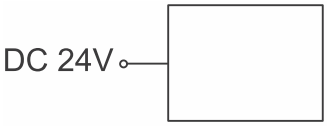

Use

Use

DE Standard Anwendung
EN *Standard Application*
FR *Application standard*

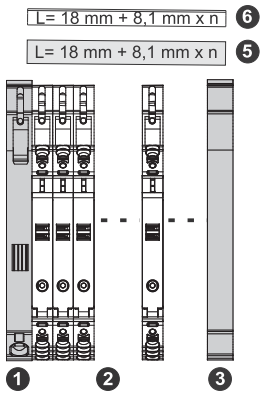

*n= LOCC-Box Module/*Modules*
/Modules

DE Anwendung mit Einspeiseklemme und Einspeiseki. mit Ausbruch mittig
EN *Standard application with supply terminal and supply terminal cutout center*
FR *Application standard avec borne d'alimentation et borne d'alimentation avec encoche au milieu*

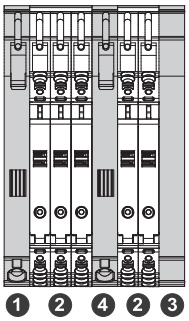

DE Anwendung mit Einspeiseklemme und Einspeiseki. mit Ausbruch rechts
EN *Standard application with supply terminal and supply terminal cutout right*
FR *Application standard avec borne d'alimentation et borne d'alimentation avec encoche à droite*

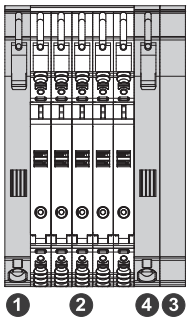

DE Anwendung mit Einspeiseklemme und Einspeiseki. mit Ausbruch links
EN *Standard application with supply terminal and supply terminal cutout left*
FR *Application standard avec borne d'alimentation et borne d'alimentation avec encoche à gauche*

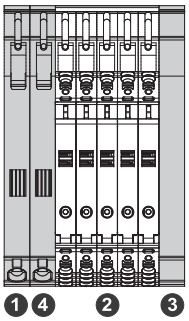

DE

1 Einspeiseklemme aus Set 716425/ 716447
2 Überwachungsbaustein – LOCC-Box
3 Endblock aus Set 716425/ 716447
4 Einspeiseklemme mit Ausbruch (716421)
5 Kupferschiene (716426/ 716426.xxx.x)
6 Abdeckung Kupferschiene (716427)

EN

1 *Supply terminal from set 716425/ 716447*
2 *Monitoring Module – LOCC-Box*
3 *End terminal from set 716425/716447*
4 *Supply Terminal with outage (716421)*
5 *Copper rail (716426/ 716426.xxx.x)*
6 *Cover copper rail (716427)*

FR

1 *La borne de raccordement au réseau se trouve dans le kit 716425/ 716447*
2 *Convertisseur de mesure – LOCC-Box*
3 *Borne d'extrémité est inclus dans le kit 716425/ 716447*
4 *Borne d'alimentation avec encoche (716421)*
5 *Barre de cuivre (716426/ 716426.xxx.x)*
6 *Recouvrement pour rail cuivre (716427)*

Use

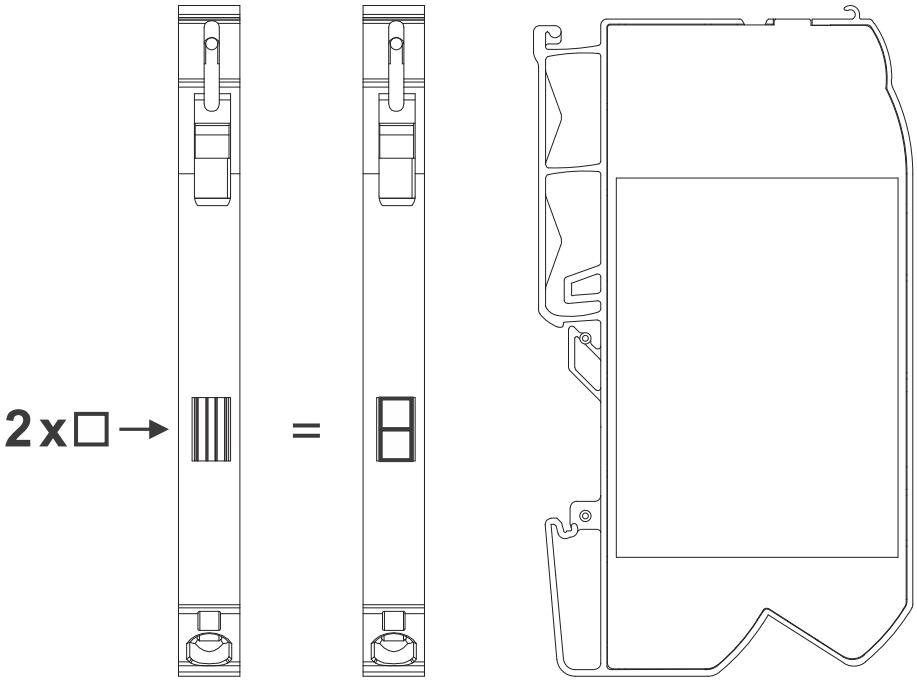

Use

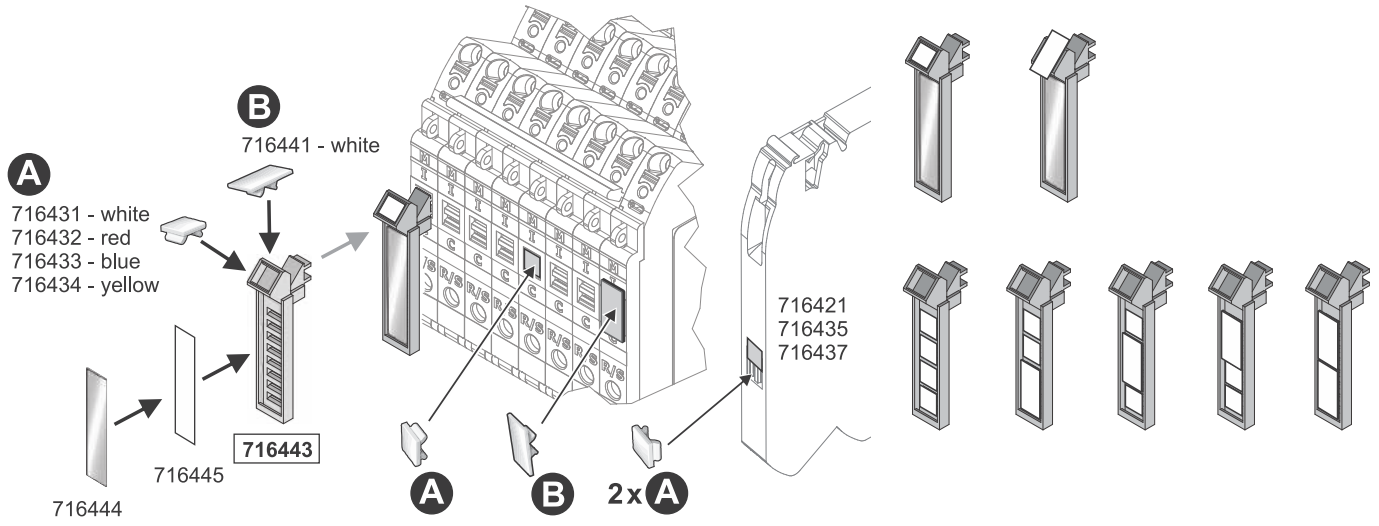

Mounting diagram

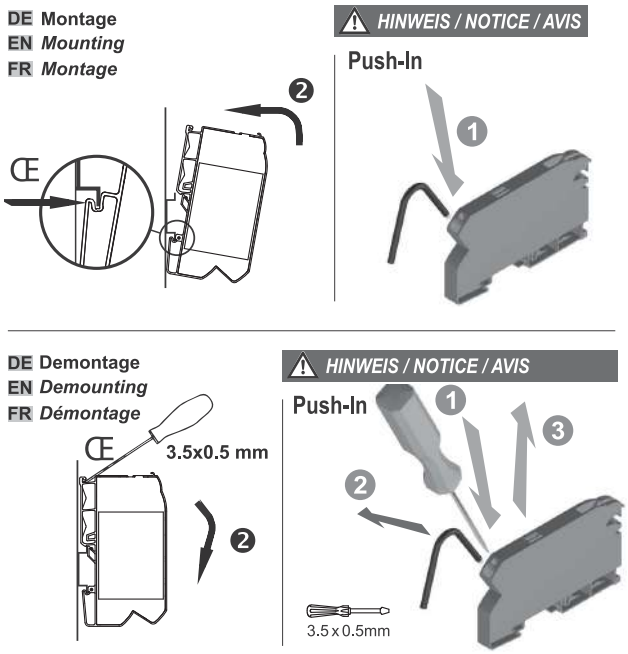

Technical data sheet

Load monitoring · LOCC-Box Accessories

Distance terminal without contact: art.no. 716422

Identification

Type	LOCC-Box-DKL 7-6422
Part No.	716422

Product version

Hardware revision	2.0
Datasheet version	02

Description

Description	LOCC-Box supply terminal without terminals, this serves as a spacer terminal, as a spacer or as an insulation plate.

General

Accessories	Distance terminal without contact
Housing material	PA 6.6 (UL 94 V-0, NFF I2, F2)
Mounting	DIN rail mountable TS35 (EN 60715)
Installation position	Any
Dimensions (w × h × d)	10.0 mm × 110.0 mm × 62.0 mm
MTBF	690000 h
Weight/unit	0.035 kg
PU (units)	2

General ambient conditions

Operation temperature range	-25 °C … +50 °C
Storage temperature range	-40 °C … +85 °C
Relative air humidity	10 % – 95 %, without condensation

Vibration resistance	4 g acc. to EN 60068-2-6
Shock resistance	15 g acc. EN 60068-2-27

Certifications/Standards

Certifications	cULus (E135145)
Standards	UL 60947-5-1 DNVGL-CG-0339 Temperature Class D – not certified Humidity Class B – not certified Vibration Class B – not certified Enclosure Class A – not certified

Dimensions

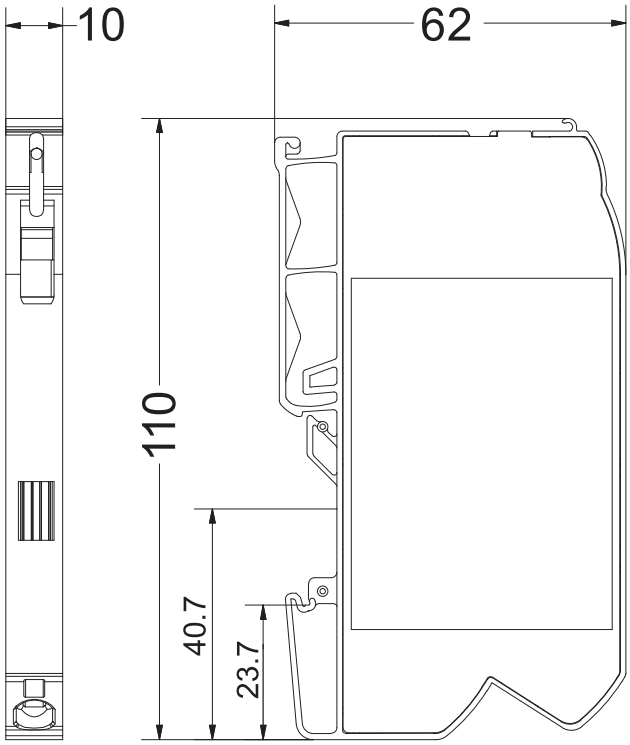

Use

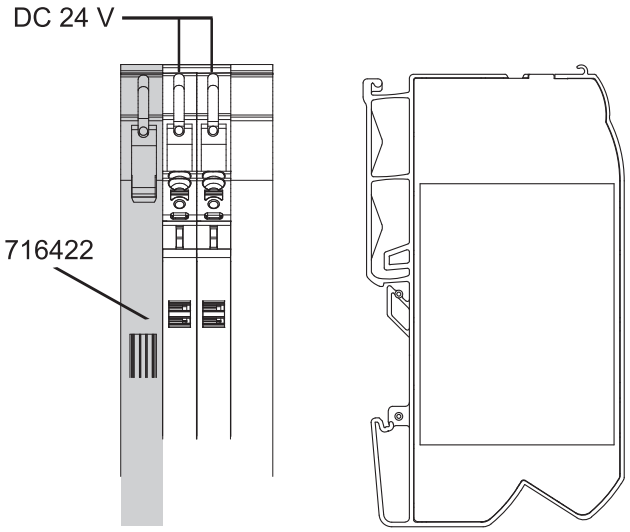

LOCC-Box empty housing without terminals

Identification

Type	LOCC-Box-DY 7-6424
Part No.	716424

Product version

Hardware revision	2.0
Datasheet version	04

Description

Description	The LOCC-Box empty housing without contacts or terminals can be used as a placeholder for future expansions. The housing is provided with an unprinted transparent cover.

General

Accessories	Empty housing without terminals
Housing material	PA 6.6 (UL 94 V-0, NFF I2, F2)
Color of the housing	Basalt grey
Mounting	DIN rail mountable TS35 (EN 60715)
Installation position	Any
Dimensions (w × h × d)	8.1 mm × 107.4 mm × 116.0 mm
Weight/unit	0.102 kg
PU (units)	2

General ambient conditions

Operation temperature range	-25 °C … +50 °C
Storage temperature range	-40 °C … +85 °C

Relative air humidity	10 % – 95 %, without condensation
Vibration resistance	4 g acc. to EN 60068-2-6
Shock resistance	15 g acc. EN 60068-2-27

Certifications/Standards

Certifications	cULus (E135145)
Standards	EN 60947-1 EN 60947-5-1 UL 60947-5-1 DNVGL-CG-0339 Temperature Class D – not certified Humidity Class B – not certified Vibration Class B – not certified Enclosure Class A – not certified

Dimensions

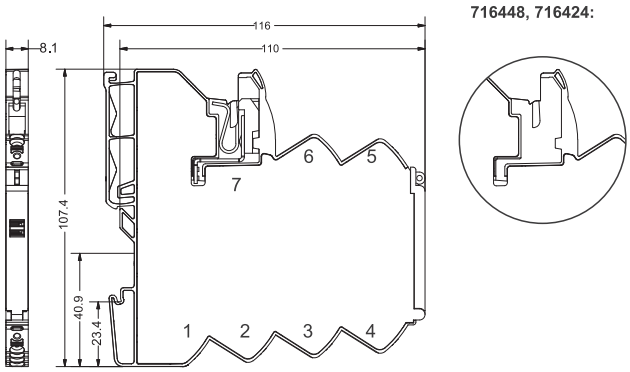

Use

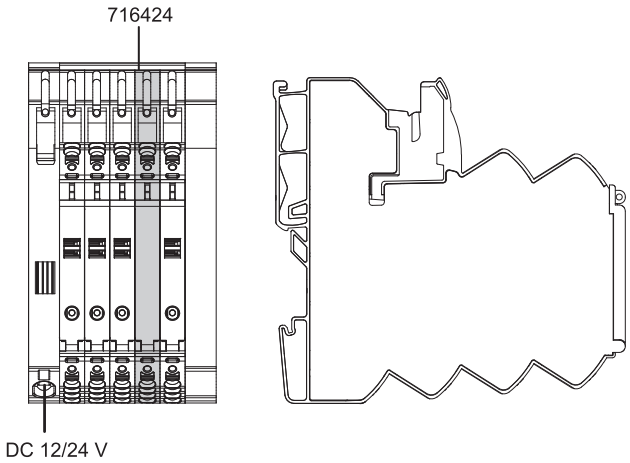

LOCC-Box supply set
consisting of supply terminal and end block
Maximum total current 40 A (UL: 35 A)

Identification

Type	LOCC-Box-ES 7-6425
Part No.	716425

Product version

Hardware revision	2.0
Datasheet version	03

Input

Rated voltage U_N	DC 12/24/48 V
Rated current I_N	Max. DC 40 A
Reverse voltage protection	No
Connection type input	Push-In 0.5 mm² – 10 mm² UL Values/stranded AWG 14 – AWG 8
Conductor connection cross section	Single-wire: max. 10 mm² Finely stranded: max 10 mm² Finely stranded with AEH: max 6 mm²
Strip length	13 mm

Output

Rated voltage U_N	DC 12/24/48 V
Output current	Max. DC 40 A
Connection type output	Screwless contact slide
Copper bus bar	3 × 10mm

General

Accessories	Supply set 10 mm²
Connection type	Push-In Single wire/fine wire 0.50 mm² – 10.0 mm² AWG 22 – AWG 7 Fine stranded wire with ferrule Finely stranded, ferrule with plastic collar 0.5 mm² – 6 mm² AWG 22 – AWG 9 UL Values AWG 14 – AWG 8
Strip length	13 mm
Housing material	PA 6.6 (UL 94 V-0, NFF I2, F2)
Mounting	DIN rail mountable TS35
Degree of protection	IP20 (only as complete system with supply terminal, end block and copper rail cover)
Installation position	Any
Dimensions (w × h × d)	10.0 mm × 110.0 mm × 62.0 mm
Weight/unit	0.07 kg
PU (units)	1

General ambient conditions

Operation temperature range	-25 °C … +50 °C
Storage temperature range	-40 °C … +85 °C
Relative air humidity	10 % – 95 %, without condensation
Vibration resistance	4 g acc. to EN 60068-2-6
Shock resistance	15 g acc. EN 60068-2-27

Certifications/Standards

Conformity	CE UKCA
Certifications	cULus (E135145) DNV (TAA0000162)
Standards	UL 60947-5-1 DNV-CG-0339

Dimensions

716435

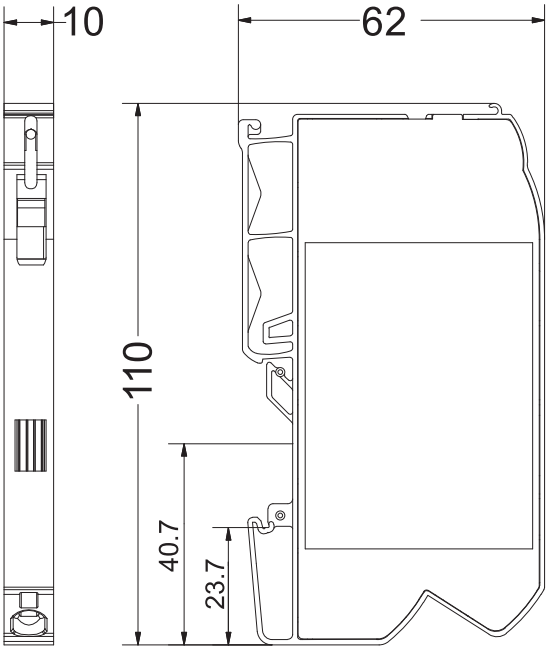

716436

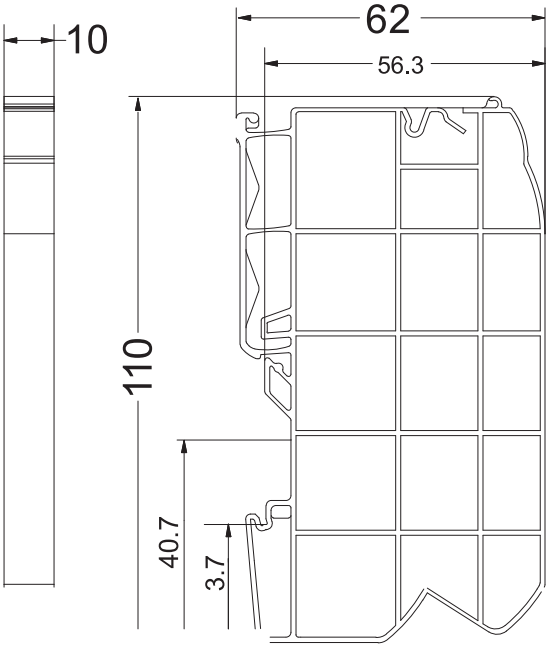

PIN assignment

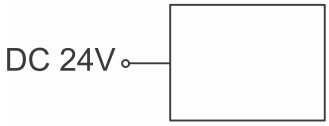

Use

DE Standard Anwendung
EN *Standard Application*
FR *Application standard*

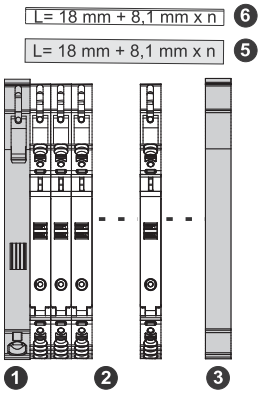

*n= LOCC-Box Module/*Modules*
/Modules

DE Anwendung mit Einspeiseklemme und Einspeiseкl. mit Ausbruch mittig
EN *Standard application with supply terminal and supply terminal cutout center*
FR *Application standard avec borne d'alimentation et borne d'alimentation avec encoche au milieu*

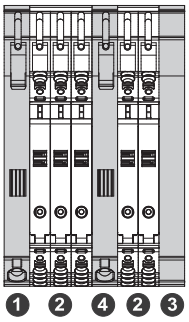

DE Anwendung mit Einspeiseklemme und Einspeiseкl. mit Ausbruch rechts
EN *Standard application with supply terminal and supply terminal cutout right*
FR *Application standard avec borne d'alimentation et borne d'alimentation avec encoche à droite*

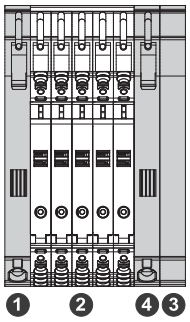

DE Anwendung mit Einspeiseklemme und Einspeiseкl. mit Ausbruch links
EN *Standard application with supply terminal and supply terminal cutout left*
FR *Application standard avec borne d'alimentation et borne d'alimentation avec encoche à gauche*

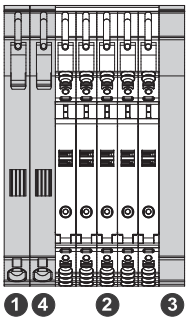

DE
1 Einspeiseklemme aus Set 716425/ 716447
2 Überwachungsbaustein – LOCC-Box
3 Endblock aus Set 716425/ 716447
4 Einspeiseklemme mit Ausbruch (716421)
5 Kupferschiene (716426/ 716426.xxx.x)
6 Abdeckung Kupferschiene (716427)

EN
1 *Supply terminal from set 716425/ 716447*
2 *Monitoring Module – LOCC-Box*
3 *End terminal from set 716425/716447*
4 *Supply Terminal with outage (716421)*
5 *Copper rail (716426/ 716426.xxx.x)*
6 *Cover copper rail (716427)*

FR
1 *La borne de raccordement au réseau se trouve dans le kit 716425/ 716447*
2 *Convertisseur de mesure – LOCC-Box*
3 *Borne d'extrémité est inclus dans le kit 716425/ 716447*
4 *Borne d'alimentation avec encoche (716421)*
5 *Barre de cuivre (716426/ 716426.xxx.x)*
6 *Recouvrement pour rail cuivre (716427)*

Use

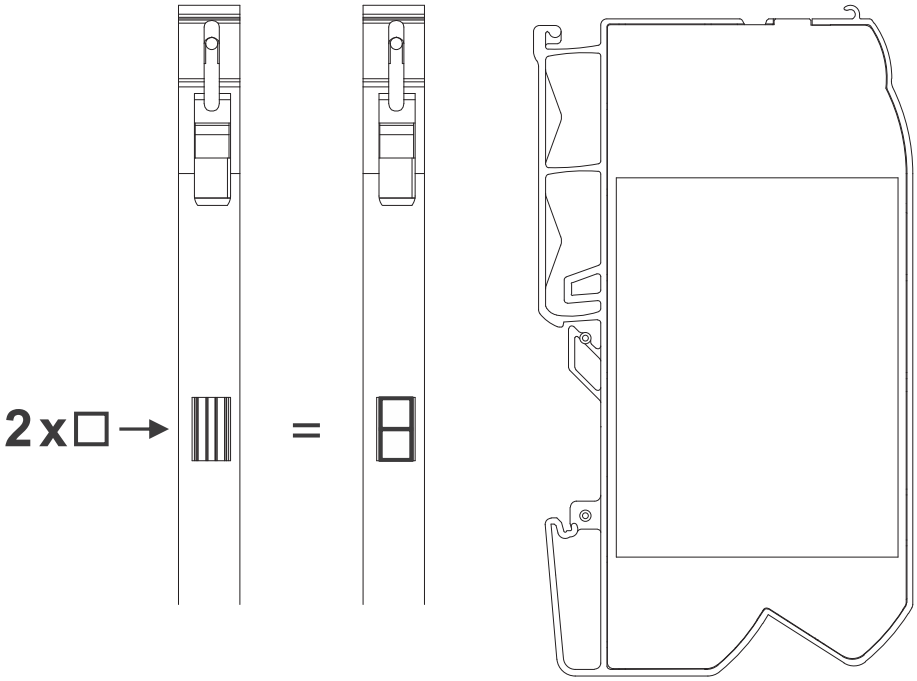

Use

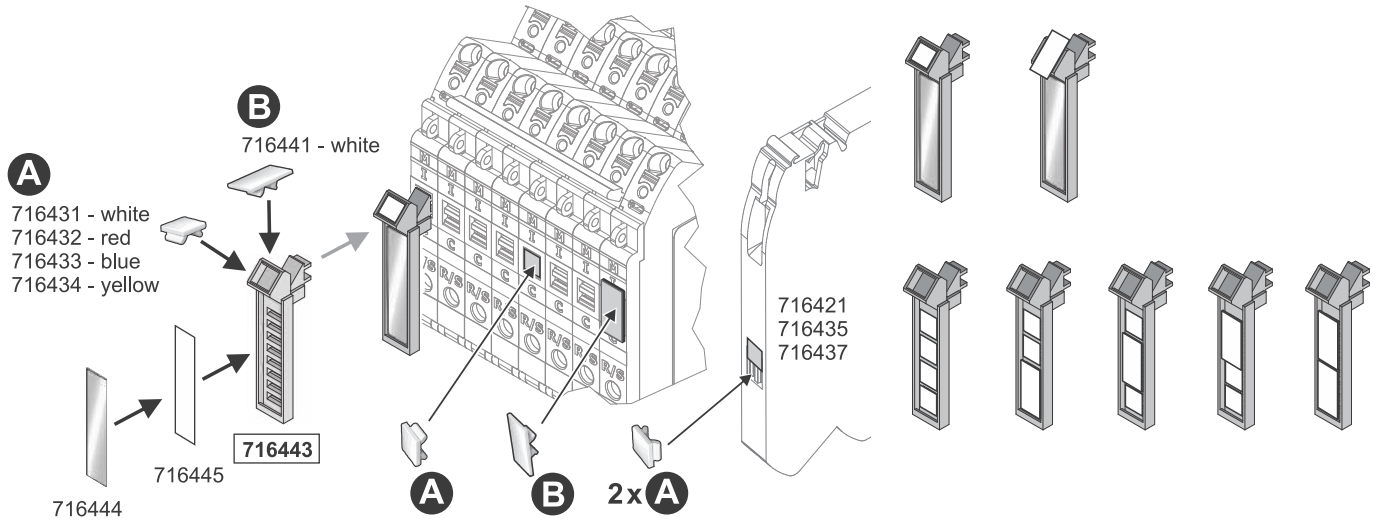

Mounting diagram

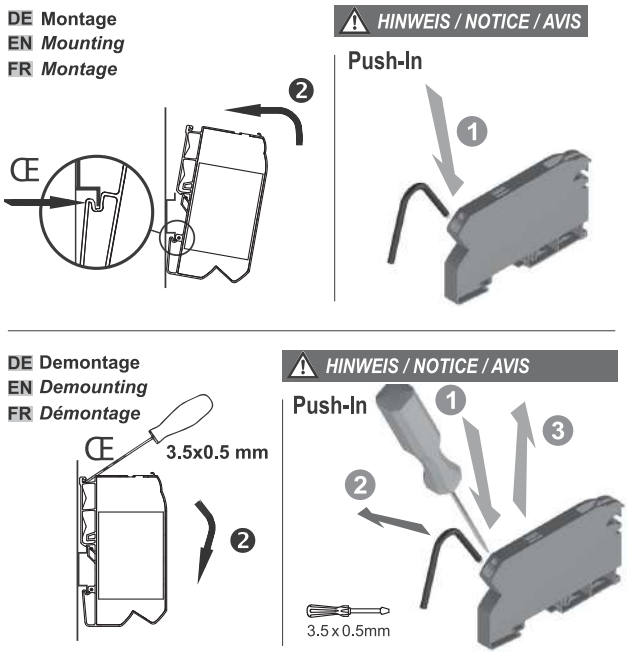

Technical data sheet

Load monitoring · LOCC-Box Accessories

Copper bus bar, tin-plated
Length: 1000 mm
Height × Depth: 10 × 3 mm

Identification

Type	LOCC-Box-CU 7-6426
Part No.	716426

Product version

Datasheet version	02

Description

Description	716426 (LOCC-Box copper bar, 1000 mm, PU=1) Further ready-made articles are available: 716426.004.2 (LOCC-Box copper bar for 4 modules + feed terminal, 50.4 mm, PU=10) 716426.008.2 (LOCC-Box copper rail for 8 modules + supply terminal, 82.8 mm, PU=10) 716426.016.2 (LOCC-Box copper bar for 16 modules + supply terminal, 147.6 mm, PU=10) 716426.032.1 (LOCC-Box copper bar for 32 modules + supply terminal, 277.2 mm, PU=1) 716426.064.1 (LOCC-Box copper bar for 64 modules + supply terminal, 536.4 mm, PU=1)

General

Accessories	CU rail 10 × 3 mm
Design	Rod 1000 mm
Material	Cu, tin-plated surface
Dimensions (L×H×T)	1000.0 × 10.0 × 3.0 mm
Weight/unit	0.265 kg
PU (units)	1

General ambient conditions

Operation temperature range	-25 °C … +50 °C
Storage temperature range	-40 °C … +80 °C

Certifications/Standards

Standards	DNVGL-CG-0339 Temperature Class D – not certified Humidity Class B – not certified Vibration Class B – not certified Enclosure Class A – not certified

Dimensions

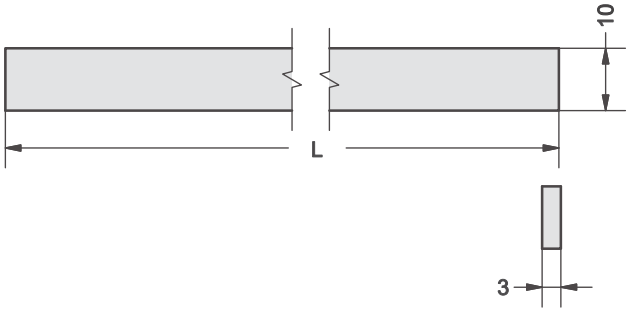

	L [mm]	Modules	VE / PU
716426.004.2	50.4	4	10
716426.008.2	82.8	8	10
716426.016.2	147.6	16	10
716426.032.1	277.2	32	1
716426.064.1	536.4	64	1
716426	1000.0	-	1

Use

DE Standard Anwendung
EN *Standard Application*
FR *Application standard*

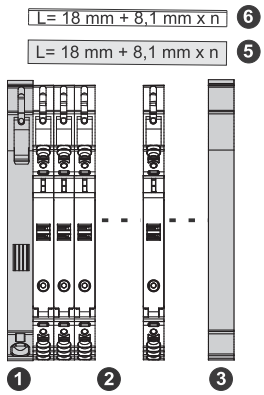

*n= LOCC-Box Module/*Modules*
/Modules

DE Anwendung mit Einspeiseklemme und Einspeiseskl. mit Ausbruch mittig
EN *Standard application with supply terminal and supply terminal cutout center*
FR *Application standard avec borne d'alimentation et borne d'alimentation avec encoche au milieu*

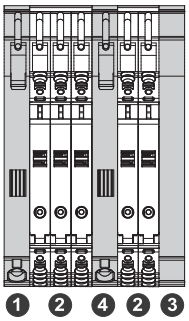

DE Anwendung mit Einspeiseklemme und Einspeiseskl. mit Ausbruch rechts
EN *Standard application with supply terminal and supply terminal cutout right*
FR *Application standard avec borne d'alimentation et borne d'alimentation avec encoche à droite*

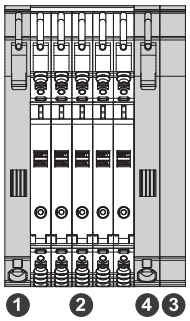

DE Anwendung mit Einspeiseklemme und Einspeiseskl. mit Ausbruch links
EN *Standard application with supply terminal and supply terminal cutout left*
FR *Application standard avec borne d'alimentation et borne d'alimentation avec encoche à gauche*

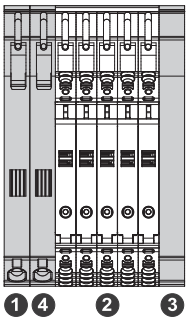

DE

1 Einspeiseklemme aus Set 716425/ 716447
2 Überwachungsbaustein – LOCC-Box
3 Endblock aus Set 716425/ 716447
4 Einspeiseklemme mit Ausbruch (716421)
5 Kupferschiene (716426/ 716426.xxx.x)
6 Abdeckung Kupferschiene (716427)

EN

1 *Supply terminal from set 716425/ 716447*
2 *Monitoring Module – LOCC-Box*
3 *End terminal from set 716425/716447*
4 *Supply Terminal with outage (716421)*
5 *Copper rail (716426/ 716426.xxx.x)*
6 *Cover copper rail (716427)*

FR

1 *La borne de raccordement au réseau se trouve dans le kit 716425/ 716447*
2 *Convertisseur de mesure – LOCC-Box*
3 *Borne d'extrémité est inclus dans le kit 716425/ 716447*
4 *Borne d'alimentation avec encoche (716421)*
5 *Barre de cuivre (716426/ 716426.xxx.x)*
6 *Recouvrement pour rail cuivre (716427)*

Use

716426.004.2

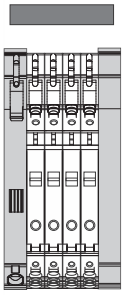

4

716426.008.2

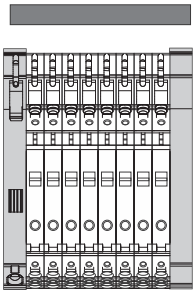

8

Use

716426.016.2

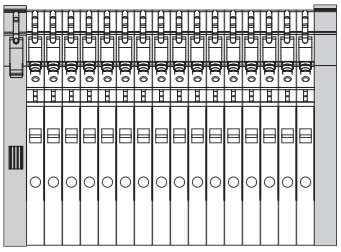

Use

716426.032.1

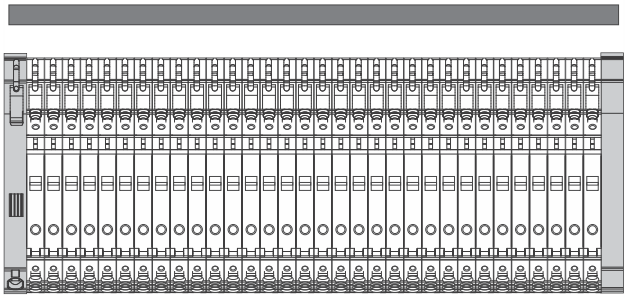

32 / 64

716426.064.1

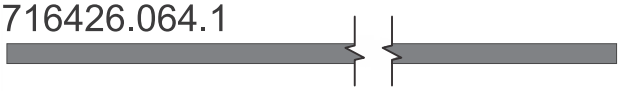

Technical data sheet

Load monitoring · LOCC-Box Accessories

Copper bus bar, tin-plated, for 4 modules
Length: 50.4 mm
Height × Depth: 10 × 3 mm

Identification

Type	LOCC-Box-CU 7-6426.004.2
Part No.	716426.004.2

Product version

Datasheet version	01

General

Accessories	CU rail 10 × 3 mm
Design	Rod 50.4 mm
Material	Cu, tin-plated surface
Dimensions (L×H×T)	50.4 × 10.0 × 3.0 mm
MTBF	659000 h
Weight/unit	0.013 kg
PU (units)	10

General ambient conditions

Operation temperature range	-25 °C … +50 °C
Storage temperature range	-25 °C … +50 °C

Certifications/Standards

Standards	DNVGL-CG-0339 Temperature Class D – not certified Humidity Class B – not certified Vibration Class B – not certified Enclosure Class A – not certified

Dimensions

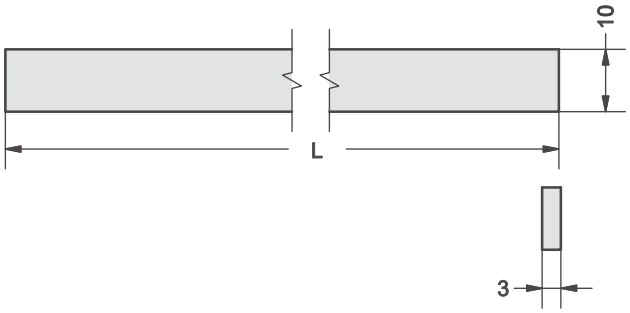

	L [mm]	Modules	VE / PU
716426.004.2	50.4	4	10
716426.008.2	82.8	8	10
716426.016.2	147.6	16	10
716426.032.1	277.2	32	1
716426.064.1	536.4	64	1
716426	1000.0	-	1

Use

DE Standard Anwendung
EN *Standard Application*
FR *Application standard*

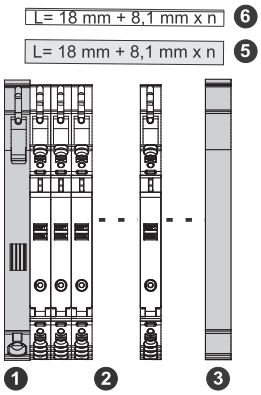

*n= LOCC-Box Module/*Modules*
/Modules

DE Anwendung mit Einspeiseklemme und Einspeisekl. mit Ausbruch mittig
EN *Standard application with supply terminal and supply terminal cutout center*
FR *Application standard avec borne d'alimentation et borne d'alimentation avec encoche au milieu*

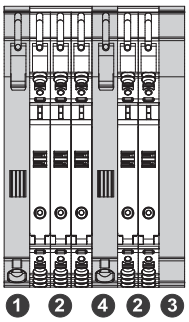

DE Anwendung mit Einspeiseklemme und Einspeisekl. mit Ausbruch rechts
EN *Standard application with supply terminal and supply terminal cutout right*
FR *Application standard avec borne d'alimentation et borne d'alimentation avec encoche à droite*

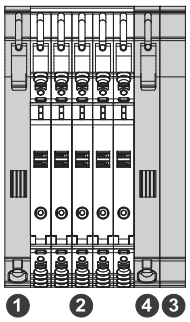

DE Anwendung mit Einspeiseklemme und Einspeisekl. mit Ausbruch links
EN *Standard application with supply terminal and supply terminal cutout left*
FR *Application standard avec borne d'alimentation et borne d'alimentation avec encoche à gauche*

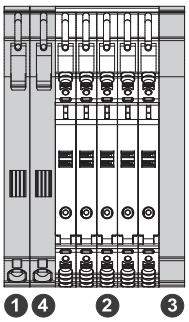

DE

1 Einspeiseklemme aus Set 716425/ 716447
2 Überwachungsbaustein – LOCC-Box
3 Endblock aus Set 716425/ 716447
4 Einspeiseklemme mit Ausbruch (716421)
5 Kupferschiene (716426/ 716426.xxx.x)
6 Abdeckung Kupferschiene (716427)

EN

1 *Supply terminal from set 716425/ 716447*
2 *Monitoring Module – LOCC-Box*
3 *End terminal from set 716425/716447*
4 *Supply Terminal with outage (716421)*
5 *Copper rail (716426/ 716426.xxx.x)*
6 *Cover copper rail (716427)*

FR

1 *La borne de raccordement au réseau se trouve dans le kit 716425/ 716447*
2 *Convertisseur de mesure – LOCC-Box*
3 *Borne d'extrémité est inclus dans le kit 716425/ 716447*
4 *Borne d'alimentation avec encoche (716421)*
5 *Barre de cuivre (716426/ 716426.xxx.x)*
6 *Recouvrement pour rail cuivre (716427)*

Use

716426.004.2

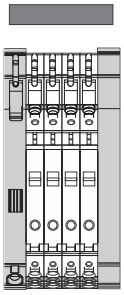

4

Technical data sheet

Load monitoring · LOCC-Box Accessories

Copper bus bar, tin-plated, for 8 modules
Length: 82.8 mm
Height × Depth: 10 × 3 mm

Identification

Type	LOCC-Box-CU 7-6426.008.2
Part No.	716426.008.2

Product version

Datasheet version	02

General

Accessories	CU rail 10 × 3 mm
Design	Rod 82.8 mm
Material	Cu, tin-plated surface
Dimensions (L×H×T)	82.8 × 10.0 × 3.0 mm
MTBF	690000 h
Weight/unit	0.022 kg
PU (units)	10

General ambient conditions

Operation temperature range	-25 °C … +50 °C
Storage temperature range	-25 °C … +50 °C

Certifications/Standards

Standards	DNVGL-CG-0339 Temperature Class D – not certified Humidity Class B – not certified Vibration Class B – not certified Enclosure Class A – not certified

Dimensions

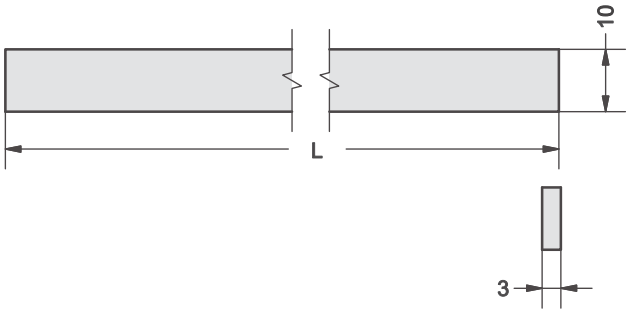

	L [mm]	Modules	VE / PU
716426.004.2	50.4	4	10
716426.008.2	82.8	8	10
716426.016.2	147.6	16	10
716426.032.1	277.2	32	1
716426.064.1	536.4	64	1
716426	1000.0	-	1

Use

DE Standard Anwendung
EN *Standard Application*
FR *Application standard*

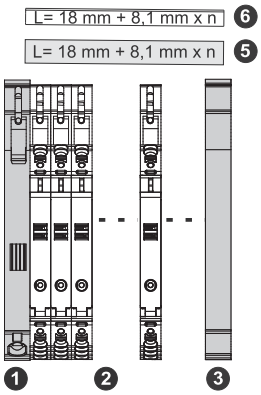

*n= LOCC-Box Module/*Modules*
/Modules

DE Anwendung mit Einspeiseklemme und Einspeisekl. mit Ausbruch mittig
EN *Standard application with supply terminal and supply terminal cutout center*
FR *Application standard avec borne d'alimentation et borne d'alimentation avec encoche au milieu*

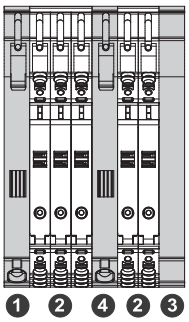

DE Anwendung mit Einspeiseklemme und Einspeisekl. mit Ausbruch rechts
EN *Standard application with supply terminal and supply terminal cutout right*
FR *Application standard avec borne d'alimentation et borne d'alimentation avec encoche à droite*

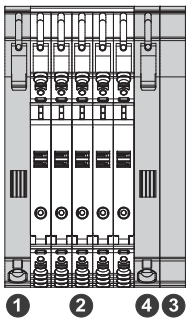

DE Anwendung mit Einspeiseklemme und Einspeisekl. mit Ausbruch links
EN *Standard application with supply terminal and supply terminal cutout left*
FR *Application standard avec borne d'alimentation et borne d'alimentation avec encoche à gauche*

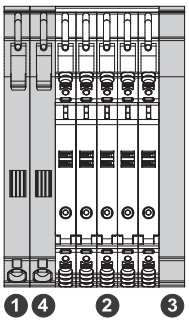

DE

1 Einspeiseklemme aus Set 716425/ 716447
2 Überwachungsbaustein – LOCC-Box
3 Endblock aus Set 716425/ 716447
4 Einspeiseklemme mit Ausbruch (716421)
5 Kupferschiene (716426/ 716426.xxx.x)
6 Abdeckung Kupferschiene (716427)

EN

1 *Supply terminal from set 716425/ 716447*
2 *Monitoring Module – LOCC-Box*
3 *End terminal from set 716425/716447*
4 *Supply Terminal with outage (716421)*
5 *Copper rail (716426/ 716426.xxx.x)*
6 *Cover copper rail (716427)*

FR

1 *La borne de raccordement au réseau se trouve dans le kit 716425/ 716447*
2 *Convertisseur de mesure – LOCC-Box*
3 *Borne d'extrémité est inclus dans le kit 716425/ 716447*
4 *Borne d'alimentation avec encoche (716421)*
5 *Barre de cuivre (716426/ 716426.xxx.x)*
6 *Recouvrement pour rail cuivre (716427)*

Use

716426.008.2

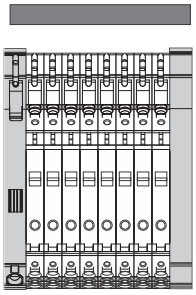

8

Technical data sheet

Load monitoring · LOCC-Box Accessories

Copper bus bar, tin-plated, for 16 modules
Length: 147.6 mm
Height × Depth: 10 × 3 mm

Identification

Type	LOCC-Box-CU 7-6426.016.2
Part No.	716426.016.2

Product version

Datasheet version	02

General

Accessories	CU rail 10 × 3 mm
Design	Rod 147.6 mm
Material	Cu, tin-plated surface
Dimensions (L×H×T)	147.6 × 10.0 × 3.0 mm
MTBF	690000 h
Weight/unit	0.039 kg
PU (units)	10

General ambient conditions

Operation temperature range	-25 °C … +50 °C
Storage temperature range	-25 °C … +50 °C

Certifications/Standards

Standards	DNVGL-CG-0339 Temperature Class D – not certified Humidity Class B – not certified Vibration Class B – not certified Enclosure Class A – not certified

Dimensions

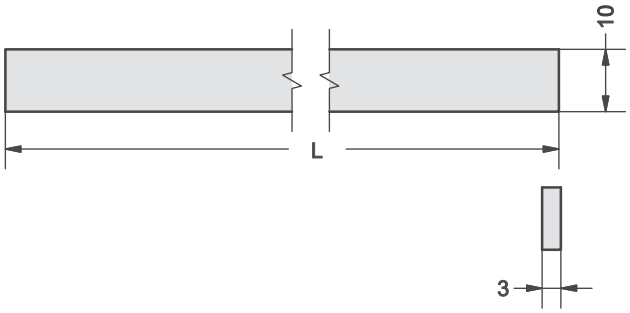

	L [mm]	Modules	VE / PU
716426.004.2	50.4	4	10
716426.008.2	82.8	8	10
716426.016.2	147.6	16	10
716426.032.1	277.2	32	1
716426.064.1	536.4	64	1
716426	1000.0	-	1

Use

DE Standard Anwendung
EN *Standard Application*
FR *Application standard*

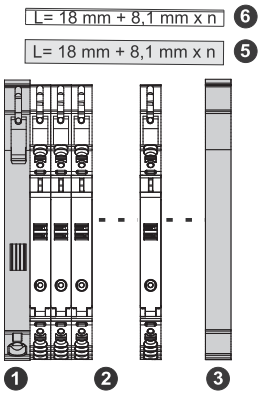

*n= LOCC-Box Module/*Modules*
/Modules

DE Anwendung mit Einspeiseklemme und Einspeisekl. mit Ausbruch mittig
EN *Standard application with supply terminal and supply terminal cutout center*
FR *Application standard avec borne d'alimentation et borne d'alimentation avec encoche au milieu*

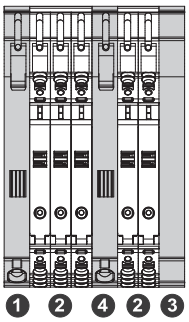

DE Anwendung mit Einspeiseklemme und Einspeisekl. mit Ausbruch rechts
EN *Standard application with supply terminal and supply terminal cutout right*
FR *Application standard avec borne d'alimentation et borne d'alimentation avec encoche à droite*

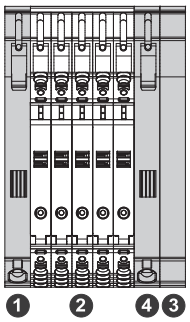

DE Anwendung mit Einspeiseklemme und Einspeisekl. mit Ausbruch links
EN *Standard application with supply terminal and supply terminal cutout left*
FR *Application standard avec borne d'alimentation et borne d'alimentation avec encoche à gauche*

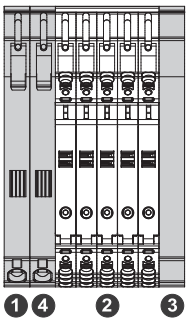

DE

1 Einspeiseklemme aus Set 716425/ 716447
2 Überwachungsbaustein – LOCC-Box
3 Endblock aus Set 716425/ 716447
4 Einspeiseklemme mit Ausbruch (716421)
5 Kupferschiene (716426/ 716426.xxx.x)
6 Abdeckung Kupferschiene (716427)

EN

1 *Supply terminal from set 716425/ 716447*
2 *Monitoring Module – LOCC-Box*
3 *End terminal from set 716425/716447*
4 *Supply Terminal with outage (716421)*
5 *Copper rail (716426/ 716426.xxx.x)*
6 *Cover copper rail (716427)*

FR

1 *La borne de raccordement au réseau se trouve dans le kit 716425/ 716447*
2 *Convertisseur de mesure – LOCC-Box*
3 *Borne d'extrémité est inclus dans le kit 716425/ 716447*
4 *Borne d'alimentation avec encoche (716421)*
5 *Barre de cuivre (716426/ 716426.xxx.x)*
6 *Recouvrement pour rail cuivre (716427)*

Use

716426.016.2

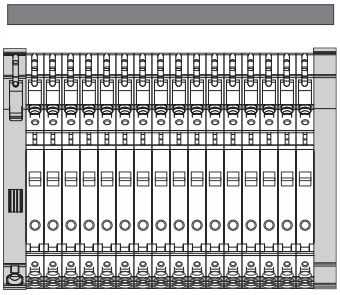

16

Technical data sheet

Load monitoring · LOCC-Box Accessories

Copper bus bar, tin-plated, for 32 modules
Length: 277.2 mm
Height × Depth: 10 × 3 mm

Identification

Type	LOCC-Box-CU 7-6426.004.2
Part No.	716426.032.1

Product version

Datasheet version	02

General

Accessories	CU rail 10 × 3 mm
Design	Rod 277.2 mm
Material	Cu, tin-plated surface
Dimensions (L×H×T)	277.2 × 10.0 × 3.0 mm
MTBF	690000 h
Weight/unit	0.074 kg
PU (units)	1

General ambient conditions

Operation temperature range	-25 °C … +50 °C
Storage temperature range	-25 °C … +50 °C

Certifications/Standards

Standards	DNVGL-CG-0339 Temperature Class D – not certified Humidity Class B – not certified Vibration Class B – not certified Enclosure Class A – not certified

Dimensions

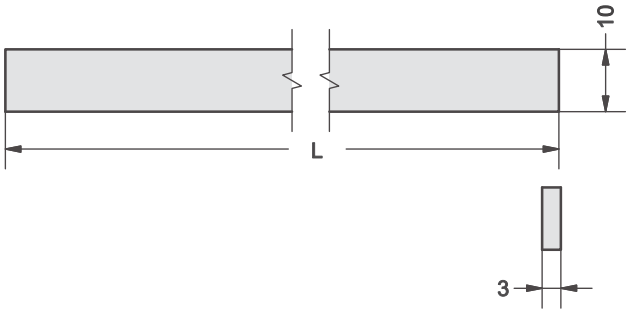

	L [mm]	Modules	VE / PU
716426.004.2	50.4	4	10
716426.008.2	82.8	8	10
716426.016.2	147.6	16	10
716426.032.1	277.2	32	1
716426.064.1	536.4	64	1
716426	1000.0	-	1

Use

DE Standard Anwendung
EN *Standard Application*
FR *Application standard*

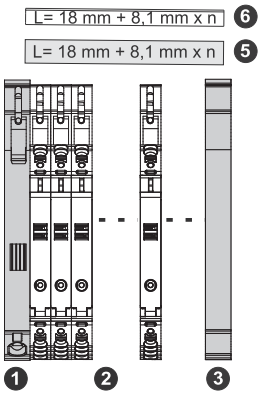

*n= LOCC-Box Module/*Modules*
/Modules

DE Anwendung mit Einspeiseklemme und Einspeisekl. mit Ausbruch mittig
EN *Standard application with supply terminal and supply terminal cutout center*
FR *Application standard avec borne d'alimentation et borne d'alimentation avec encoche au milieu*

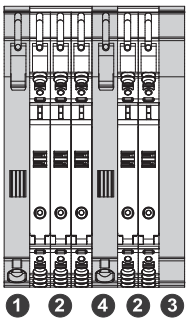

DE Anwendung mit Einspeiseklemme und Einspeisekl. mit Ausbruch rechts
EN *Standard application with supply terminal and supply terminal cutout right*
FR *Application standard avec borne d'alimentation et borne d'alimentation avec encoche à droite*

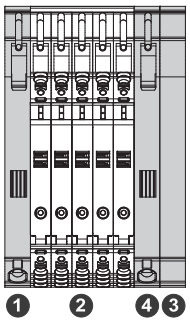

DE Anwendung mit Einspeiseklemme und Einspeisekl. mit Ausbruch links
EN *Standard application with supply terminal and supply terminal cutout left*
FR *Application standard avec borne d'alimentation et borne d'alimentation avec encoche à gauche*

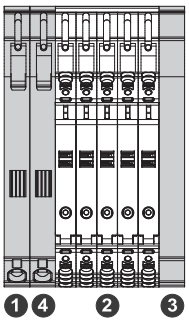

DE

1 Einspeiseklemme aus Set 716425/ 716447
2 Überwachungsbaustein – LOCC-Box
3 Endblock aus Set 716425/ 716447
4 Einspeiseklemme mit Ausbruch (716421)
5 Kupferschiene (716426/ 716426.xxx.x)
6 Abdeckung Kupferschiene (716427)

EN

1 *Supply terminal from set 716425/ 716447*
2 *Monitoring Module – LOCC-Box*
3 *End terminal from set 716425/716447*
4 *Supply Terminal with outage (716421)*
5 *Copper rail (716426/ 716426.xxx.x)*
6 *Cover copper rail (716427)*

FR

1 *La borne de raccordement au réseau se trouve dans le kit 716425/ 716447*
2 *Convertisseur de mesure – LOCC-Box*
3 *Borne d'extrémité est inclus dans le kit 716425/ 716447*
4 *Borne d'alimentation avec encoche (716421)*
5 *Barre de cuivre (716426/ 716426.xxx.x)*
6 *Recouvrement pour rail cuivre (716427)*

Use

716426.032.1

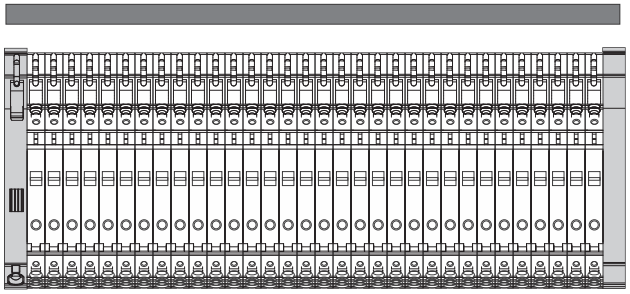

32

Technical data sheet

Load monitoring · LOCC-Box Accessories

Copper bus bar, tin-plated, for 64 modules
Length: 536.4 mm
Height × Depth: 10 × 3 mm

Identification

Type	LOCC-Box-CU 7-6426.064.1
Part No.	716426.064.1

Product version

Datasheet version	02

General

Accessories	CU rail 10 × 3 mm
Design	Rod 536.4 mm
Material	Cu, tin-plated surface
Dimensions (L×H×T)	536.4 × 10.0 × 3.0 mm
Weight/unit	0.142 kg
PU (units)	1

General ambient conditions

Operation temperature range	-25 °C … +50 °C
Storage temperature range	-25 °C … +50 °C

Certifications/Standards

Standards	DNVGL-CG-0339 Temperature Class D – not certified Humidity Class B – not certified Vibration Class B – not certified Enclosure Class A – not certified

Dimensions

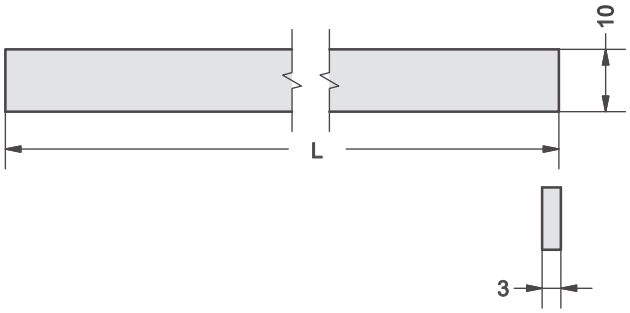

	L [mm]	Modules	VE / PU
716426.004.2	50.4	4	10
716426.008.2	82.8	8	10
716426.016.2	147.6	16	10
716426.032.1	277.2	32	1
716426.064.1	536.4	64	1
716426	1000.0	-	1

Use

DE Standard Anwendung
EN *Standard Application*
FR *Application standard*

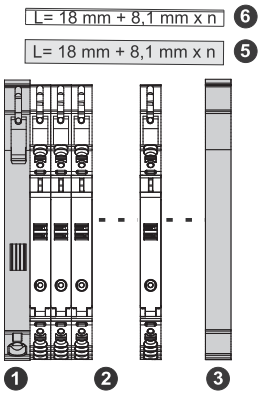

*n= LOCC-Box Module/*Modules*
/Modules

DE Anwendung mit Einspeiseklemme und Einspeisekl. mit Ausbruch mittig
EN *Standard application with supply terminal and supply terminal cutout center*
FR *Application standard avec borne d'alimentation et borne d'alimentation avec encoche au milieu*

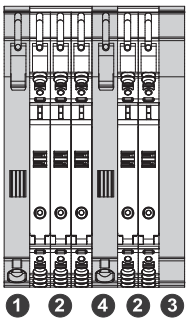

DE Anwendung mit Einspeiseklemme und Einspeisekl. mit Ausbruch rechts
EN *Standard application with supply terminal and supply terminal cutout right*
FR *Application standard avec borne d'alimentation et borne d'alimentation avec encoche à droite*

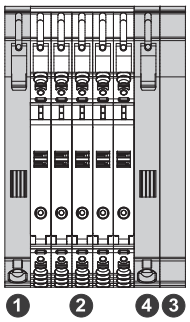

DE Anwendung mit Einspeiseklemme und Einspeisekl. mit Ausbruch links
EN *Standard application with supply terminal and supply terminal cutout left*
FR *Application standard avec borne d'alimentation et borne d'alimentation avec encoche à gauche*

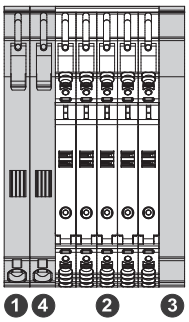

DE

1 Einspeiseklemme aus Set 716425/ 716447
2 Überwachungsbaustein – LOCC-Box
3 Endblock aus Set 716425/ 716447
4 Einspeiseklemme mit Ausbruch (716421)
5 Kupferschiene (716426/ 716426.xxx.x)
6 Abdeckung Kupferschiene (716427)

EN

1 *Supply terminal from set 716425/ 716447*
2 *Monitoring Module – LOCC-Box*
3 *End terminal from set 716425/716447*
4 *Supply Terminal with outage (716421)*
5 *Copper rail (716426/ 716426.xxx.x)*
6 *Cover copper rail (716427)*

FR

1 *La borne de raccordement au réseau se trouve dans le kit 716425/ 716447*
2 *Convertisseur de mesure – LOCC-Box*
3 *Borne d'extrémité est inclus dans le kit 716425/ 716447*
4 *Borne d'alimentation avec encoche (716421)*
5 *Barre de cuivre (716426/ 716426.xxx.x)*
6 *Recouvrement pour rail cuivre (716427)*

Use

716426.064.1

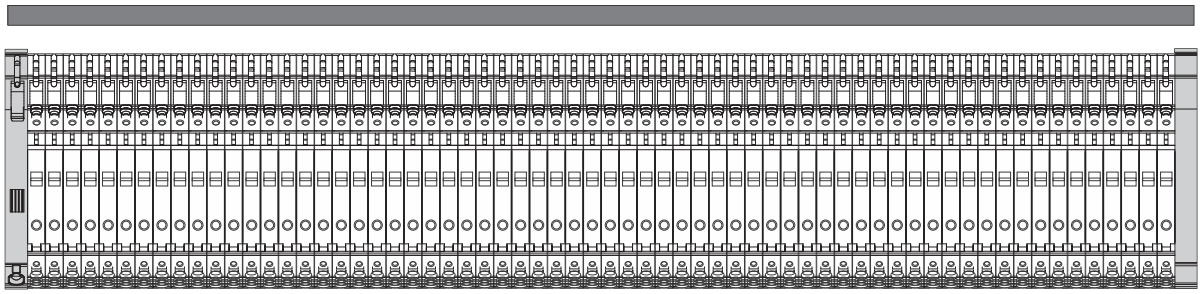

64

**Cover, copper rail,
Length 1 m**

Identification

Type	LOCC-Box-AD 7-6427
Part No.	716427

Product version

Datasheet version	01

General

Accessories	CU rail cover
Design	Rod 1000 mm
Material	ABS halogen-free
Color	grey
Dimensions (L×H×T)	1000.0 × 10.0 × 3.0 mm
Weight/unit	0.1 kg
PU (units)	1

General ambient conditions

Operation temperature range	-25 °C … +50 °C
Storage temperature range	-40 °C … +80 °C

Dimensions

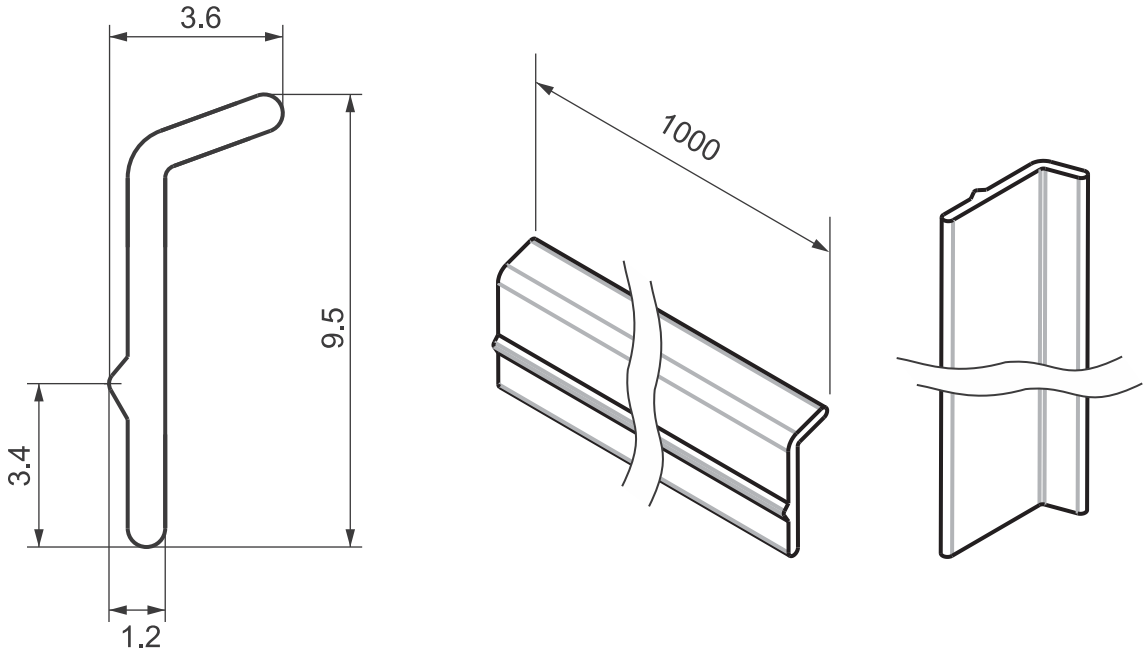

Use

DE Standard Anwendung
EN *Standard Application*
FR *Application standard*

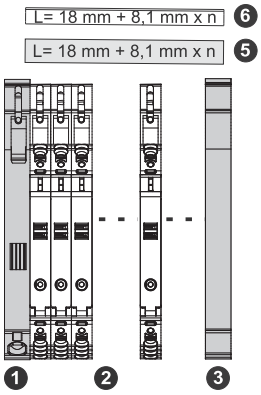

*n= LOCC-Box Module/*Modules*
/Modules

DE Anwendung mit Einspeiseklemme und Einspeisekl. mit Ausbruch mittig
EN *Standard application with supply terminal and supply terminal cutout center*
FR *Application standard avec borne d'alimentation et borne d'alimentation avec encoche au milieu*

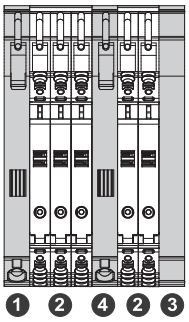

DE Anwendung mit Einspeiseklemme und Einspeisekl. mit Ausbruch rechts
EN *Standard application with supply terminal and supply terminal cutout right*
FR *Application standard avec borne d'alimentation et borne d'alimentation avec encoche à droite*

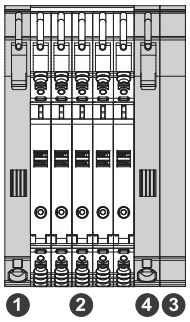

DE Anwendung mit Einspeiseklemme und Einspeisekl. mit Ausbruch links
EN *Standard application with supply terminal and supply terminal cutout left*
FR *Application standard avec borne d'alimentation et borne d'alimentation avec encoche à gauche*

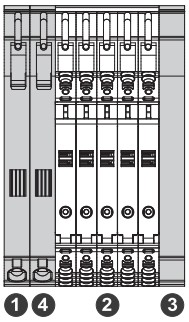

DE

1 Einspeiseklemme aus Set 716425/ 716447
2 Überwachungsbaustein – LOCC-Box
3 Endblock aus Set 716425/ 716447
4 Einspeiseklemme mit Ausbruch (716421)
5 Kupferschiene (716426/ 716426.xxx.x)
6 Abdeckung Kupferschiene (716427)

EN

1 *Supply terminal from set 716425/ 716447*
2 *Monitoring Module – LOCC-Box*
3 *End terminal from set 716425/716447*
4 *Supply Terminal with outage (716421)*
5 *Copper rail (716426/ 716426.xxx.x)*
6 *Cover copper rail (716427)*

FR

1 *La borne de raccordement au réseau se trouve dans le kit 716425/ 716447*
2 *Convertisseur de mesure – LOCC-Box*
3 *Borne d'extrémité est inclus dans le kit 716425/ 716447*
4 *Borne d'alimentation avec encoche (716421)*
5 *Barre de cuivre (716426/ 716426.xxx.x)*
6 *Recouvrement pour rail cuivre (716427)*

Technical data sheet

Load monitoring · LOCC-Box Accessories

Insulated jumper combs
8-pin

Identification

Type	LOCC-Box-BKW 7-6428
Part No.	716428

Product version

Datasheet version	03

General

Accessories	Jumper comb 8-pin white
Connection type	Plug-in
Contact design	Flat contact 0.5 mm
Pin spacing	8.2 mm
Contact material	FeZn
Material	PVC hard
Color	white
Flamability according to UL 94	V0
Dimensions (w × h × d)	63.0 mm × 3.3 mm × 12.0 mm
Weight/unit	0.003 kg
PU (units)	5

General ambient conditions

Operation temperature range	-40 °C … +80 °C
Storage temperature range	-40 °C … +85 °C
Vibration resistance	4 g acc. to EN 60068-2-6
Shock resistance	15 g acc. EN 60068-2-27

Technical data

Rated current	DC 6 A
Pole number	8

Dimensions

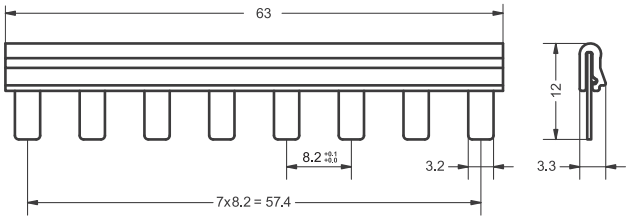

Technical data sheet

Load monitoring · LOCC-Box Accessories

Insulated jumper combs
8-pin

Identification

Type	LOCC-Box-BKR 7-6429
Part No.	716429

Product version

Datasheet version	04

General

Accessories	Jumper comb 8-pin red
Connection type	Plug-in
Contact design	Flat contact 0.5 mm
Pin spacing	8.2 mm
Contact material	FeZn
Material	PVC hard
Color	red
Flamability according to UL 94	V0
Dimensions (w × h × d)	63.0 mm × 3.3 mm × 12.0 mm
Weight/unit	0.003 kg
PU (units)	5

General ambient conditions

Operation temperature range	-40 °C … +80 °C
Storage temperature range	-40 °C … +85 °C
Vibration resistance	4 g acc. to EN 60068-2-6
Shock resistance	15 g acc. EN 60068-2-27

Technical data

Rated current	DC 6 A
Pole number	8

Dimensions

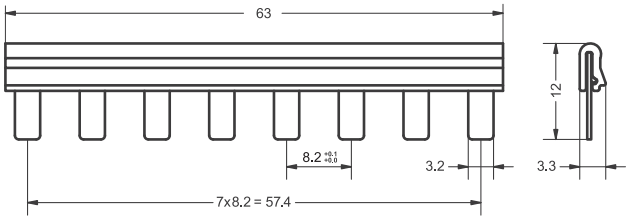

Technical data sheet

Load monitoring · LOCC-Box Accessories

Insulated jumper combs
8-pin

Identification

Type	LOCC-Box-BKB 7-6430
Part No.	716430

Product version

Datasheet version	04

General

Accessories	Jumper comb 8-pin blue
Connection type	Plug-in
Contact design	Flat contact 0.5 mm
Pin spacing	8.2 mm
Contact material	FeZn
Material	PVC hard
Color	blue
Flamability according to UL 94	V0
Dimensions (w × h × d)	63.0 mm × 3.3 mm × 12.0 mm
Weight/unit	0.003 kg
PU (units)	5

General ambient conditions

Operation temperature range	-40 °C … +80 °C
Storage temperature range	-40 °C … +85 °C
Vibration resistance	4 g acc. to EN 60068-2-6
Shock resistance	15 g acc. EN 60068-2-27

Technical data

Rated current	DC 6 A
Pole number	8

Dimensions

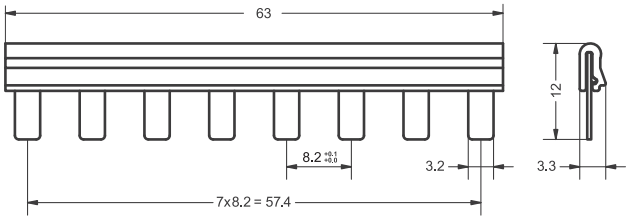

Technical data sheet
LOCC-Box Accessories

Labeling system
Labeling tags 5 × 5 mm
single signs

Identification

Type	LOCC-Box-BZW 7-6431
Part No.	716431

Product version

Datasheet version	02

Description

Description	Terminal marker 5×5 mm, frame with 200 pieces, printable (Dekafix compatible)

General

Accessories	Labelling sign 5x5 mm white
Design	200 tabs
Pin spacing	5 mm
Material	PA 6.6 (UL 94 V2)
Color	white
Installation position	Any
Flamability according to UL 94	V2
Dimensions	5 × 5 mm
MTBF	690000 h
Weight/unit	0.01 kg
PU (units)	1

Technical data sheet
LOCC-Box Accessories

General ambient conditions

Operation temperature range	-40 °C … +100 °C
Storage temperature range	-40 °C … +100 °C

Certifications/Standards

Conformity	RoHS
Certifications	UL 94 V2

Notes and Comments

Note	halogen-free

Dimensions

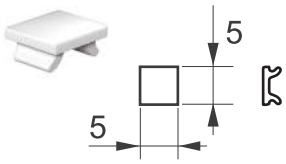

Use

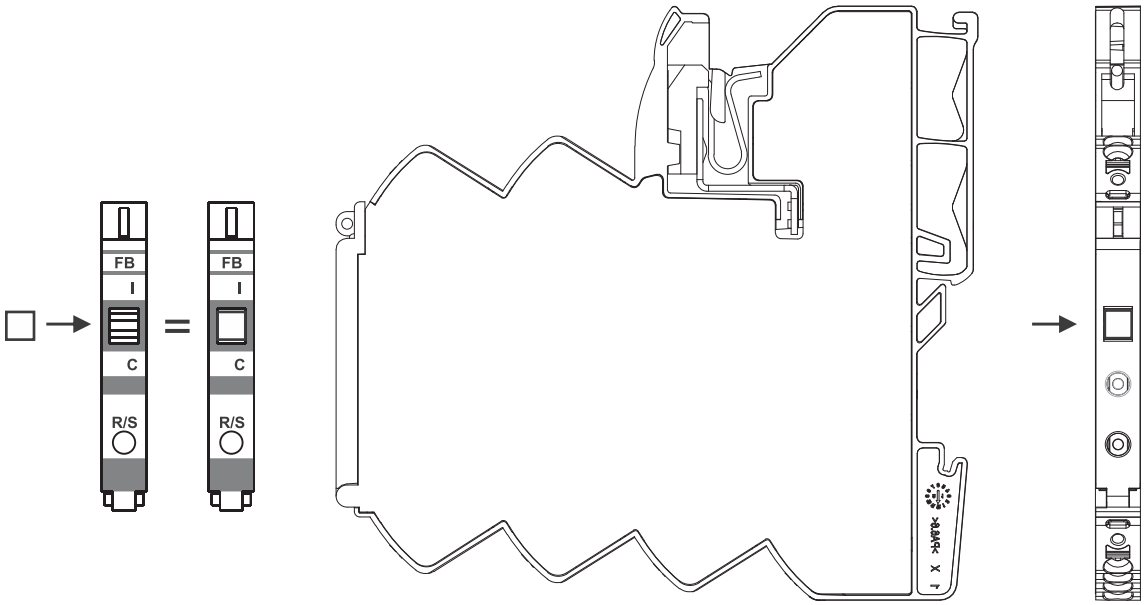

Use

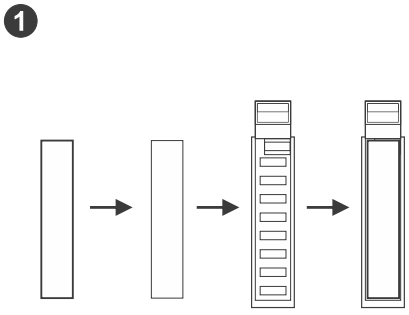
1
716444
716445
716443

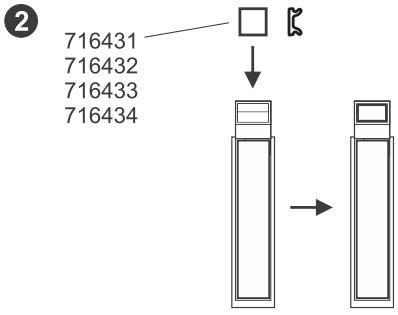
2
716431
716432
716433
716434
716443

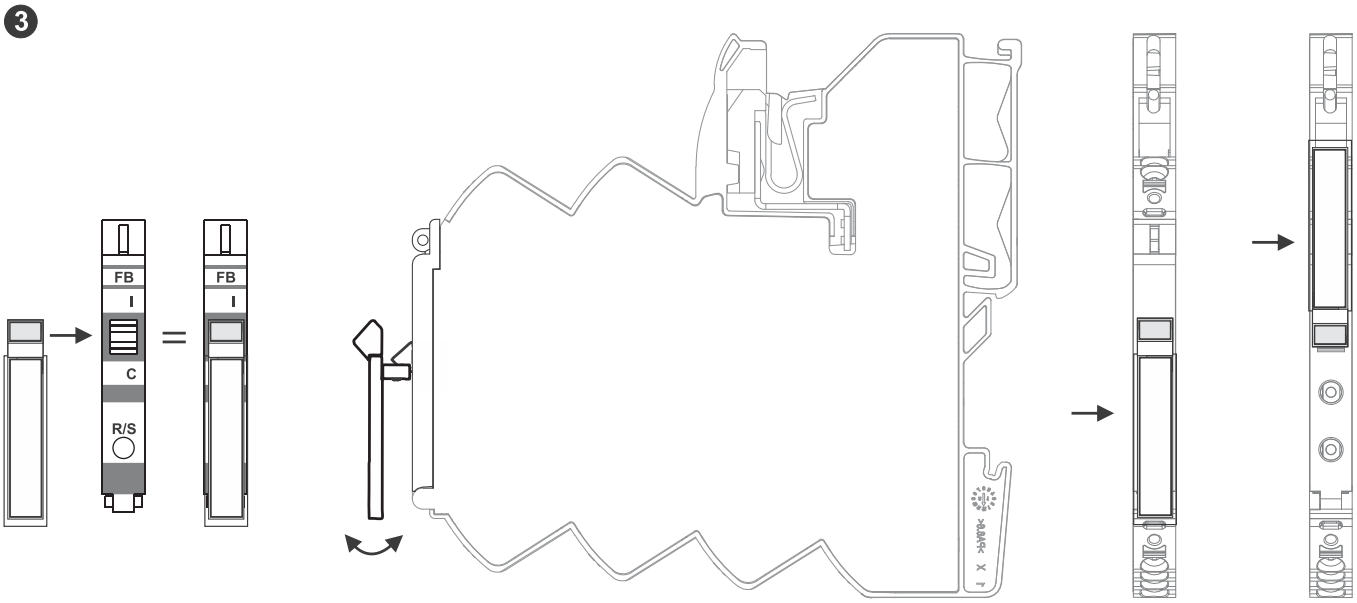
3
FB
I
C
R/S
FB
I

Use

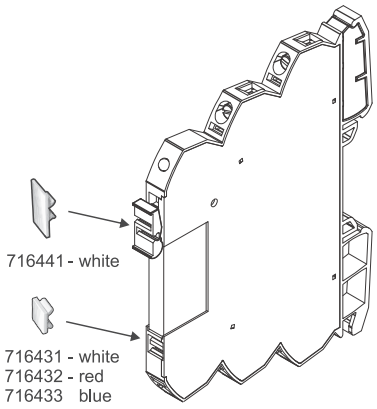
716441 - white
716431 - white
716432 - red
716433 blue

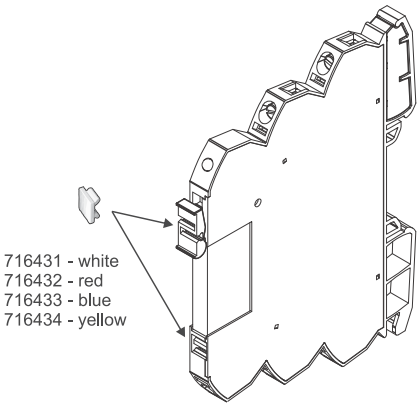
716431 - white
716432 - red
716433 - blue
716434 - yellow

Use

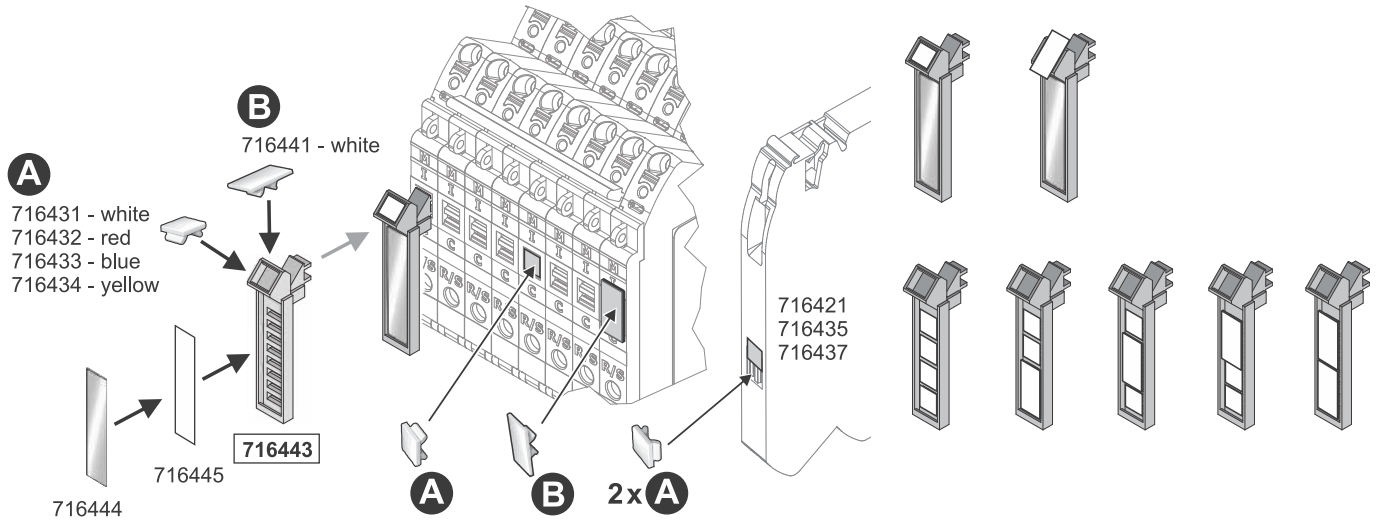
B
716441 - white
A
716431 - white
716432 - red
716433 - blue
716434 - yellow
716443
716445
716444
A
B
2x A
716421
716435
716437

Use

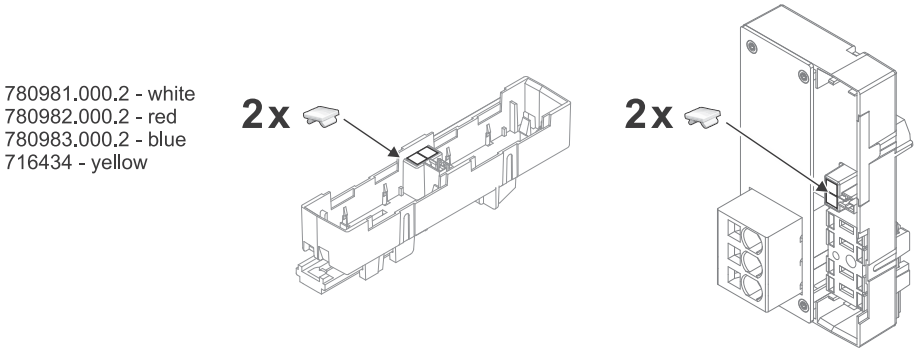
780981.000.2 - white
780982.000.2 - red
780983.000.2 - blue
716434 - yellow
2x
2x

Technical data sheet
LOCC-Box Accessories

Labeling system
Labeling tags 5 × 5 mm
single signs

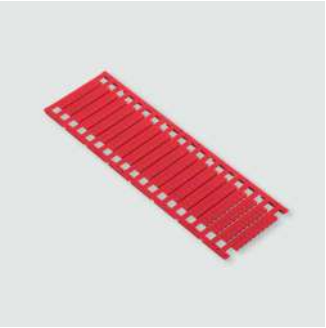

RoHS halogen free

Identification

Type	LOCC-Box-BZR 7-6432
Part No.	716432

Product version

Datasheet version	02

Description

Description	Terminal marker 5×5 mm, frame with 200 pieces, printable (Dekafix compatible)

General

Accessories	Labelling sign 5x5 mm red
Design	200 tabs
Pin spacing	5 mm
Material	PA 6.6 (UL 94 V2)
Color	red
Installation position	Any
Flamability according to UL 94	V2
Dimensions	5 × 5 mm
MTBF	690000 h
Weight/unit	0.01 kg
PU (units)	1

Technical data sheet
LOCC-Box Accessories

General ambient conditions

Operation temperature range	-40 °C … +100 °C
Storage temperature range	-40 °C … +100 °C

Certifications/Standards

Conformity	RoHS
Certifications	UL 94 V2

Notes and Comments

Note	halogen-free

Dimensions

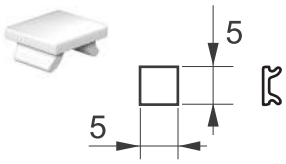

Use

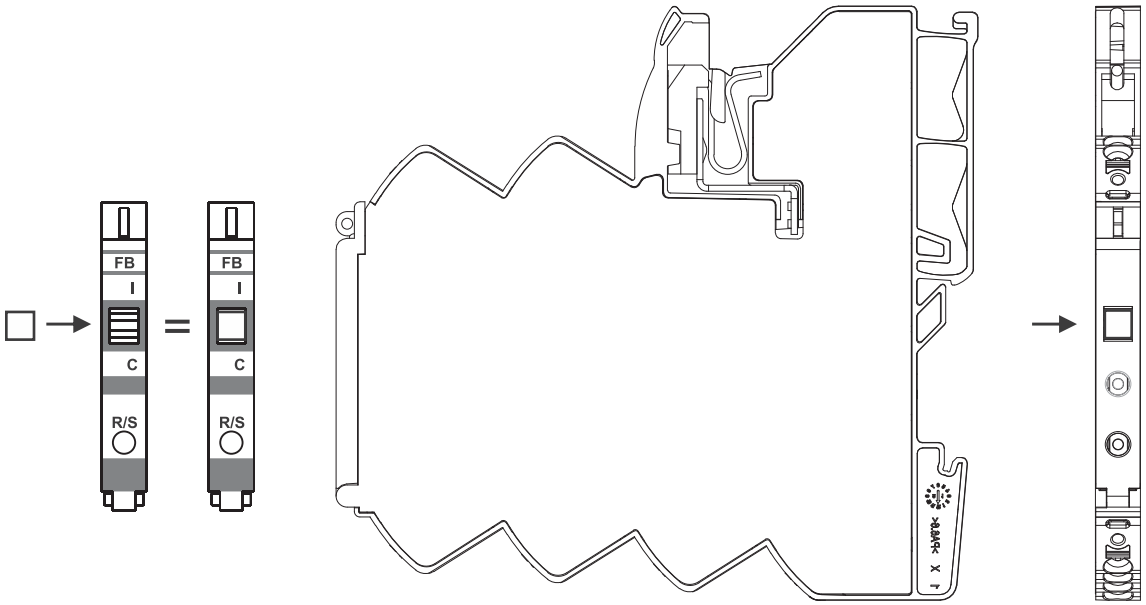

Use

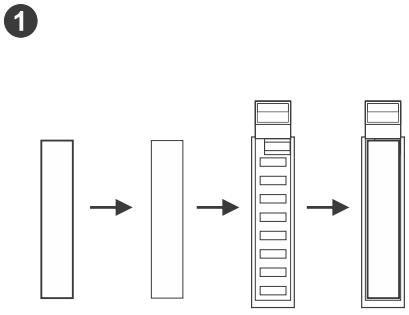
1
716444
716445
716443

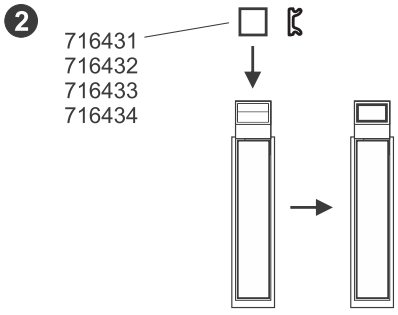
2
716431
716432
716433
716434
716443

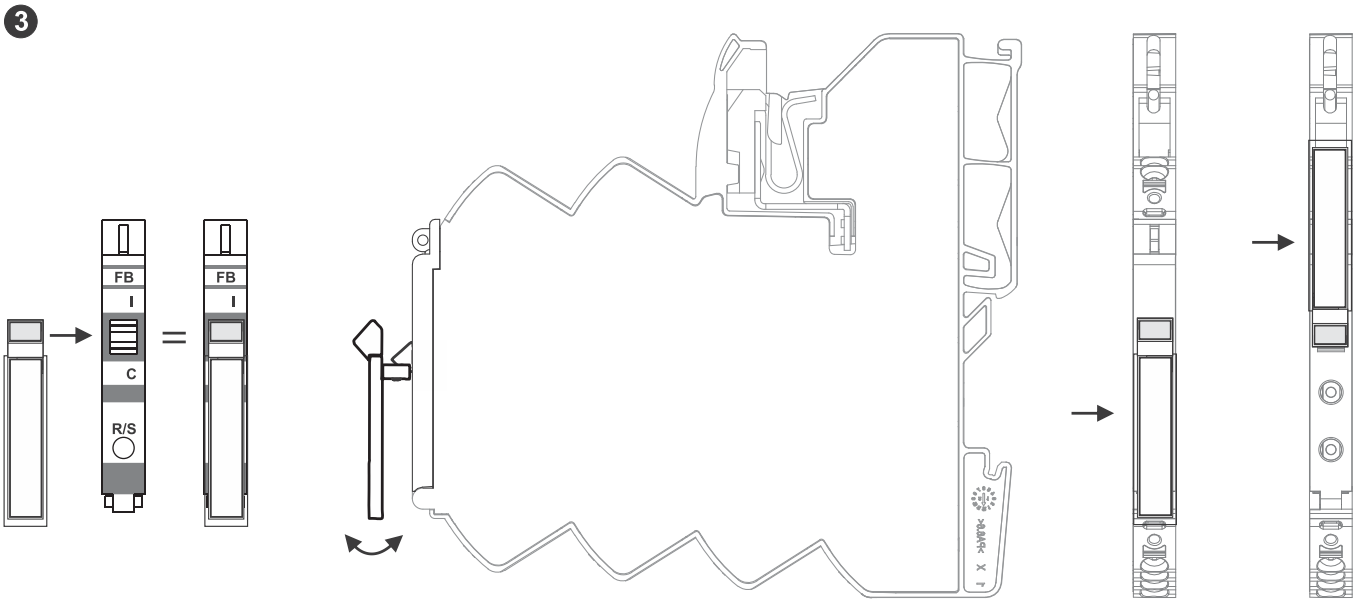
3
FB
I
C
R/S
FB
I

Use

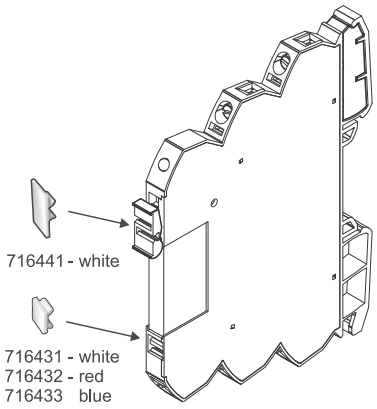
716441 - white
716431 - white
716432 - red
716433 blue

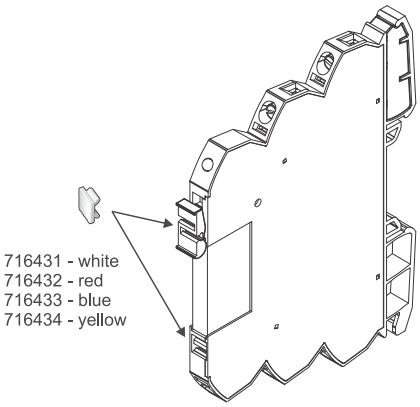
716431 - white
716432 - red
716433 - blue
716434 - yellow

Use

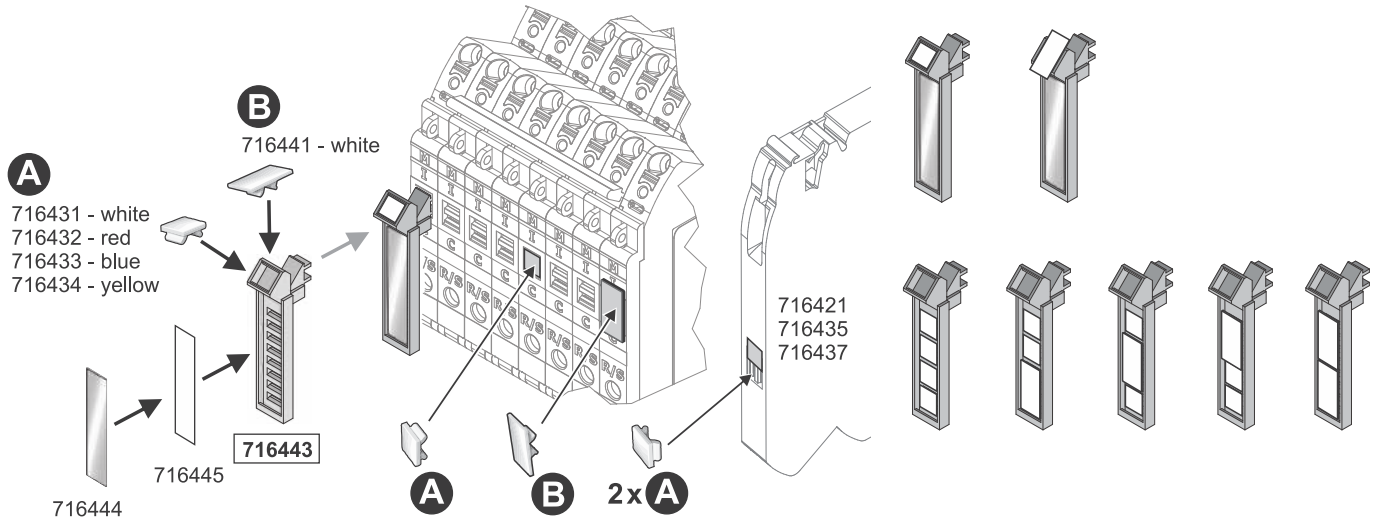
B
716441 - white
A
716431 - white
716432 - red
716433 - blue
716434 - yellow
716443
716445
716444
A
B
2x A
716421
716435
716437

Use

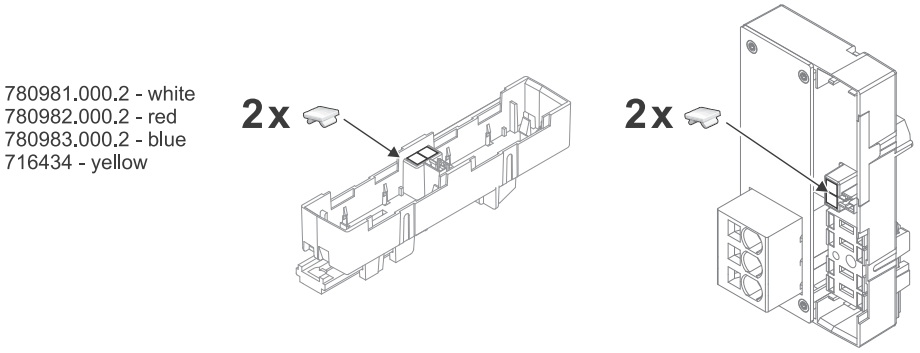
780981.000.2 - white
780982.000.2 - red
780983.000.2 - blue
716434 - yellow
2x
2x

Technical data sheet
LOCC-Box Accessories

Labeling system
Labeling tags 5 × 5 mm
single signs

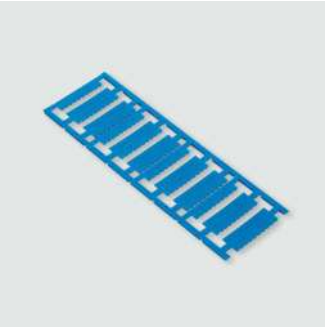

Identification

Type	LOCC-Box-BZB 7-6433
Part No.	716433

Product version

Datasheet version	02

Description

Description	Terminal marker 5×5 mm, frame with 200 pieces, printable (Dekafix compatible)

General

Accessories	Labelling sign 5x5 mm blue
Design	200 tabs
Pin spacing	5 mm
Material	PA 6.6 (UL 94 V2)
Color	blue
Installation position	Any
Flamability according to UL 94	V2
Dimensions	5 × 5 mm
MTBF	690000 h
Weight/unit	0.01 kg
PU (units)	1

Technical data sheet
LOCC-Box Accessories

General ambient conditions

Operation temperature range	-40 °C … +100 °C
Storage temperature range	-40 °C … +100 °C

Certifications/Standards

Conformity	RoHS
Certifications	UL 94 V2

Notes and Comments

Note	halogen-free

Dimensions

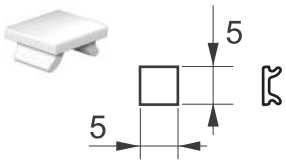

Use

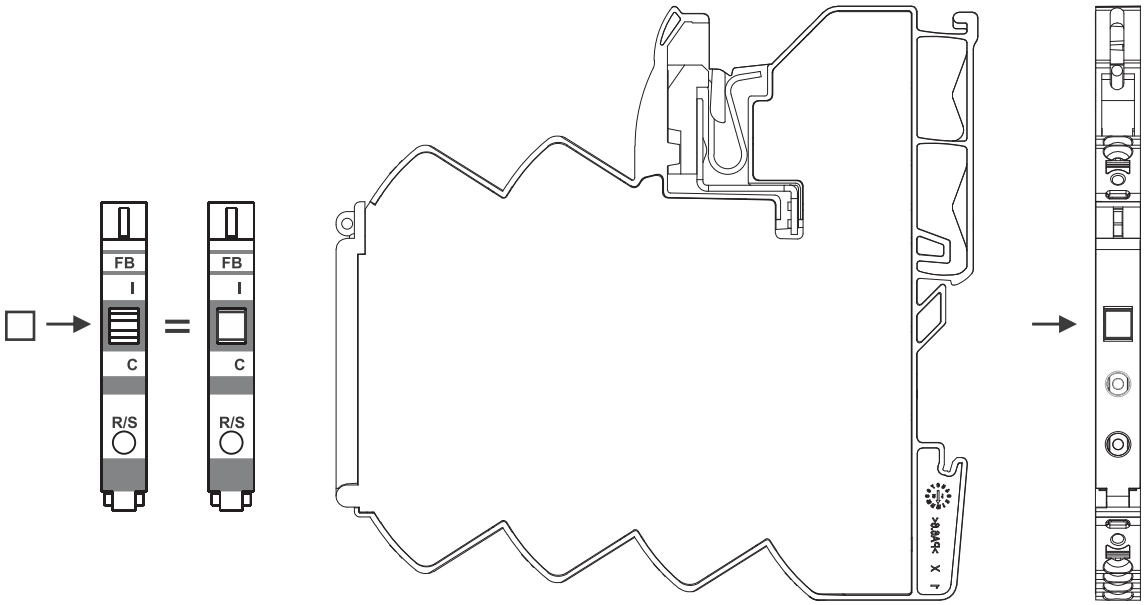

Use

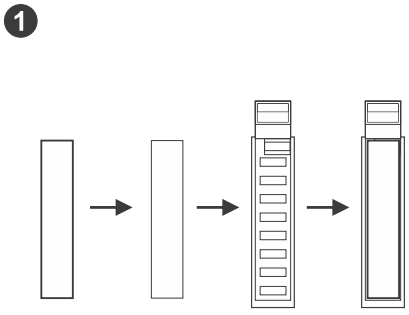
1
716444
716445
716443

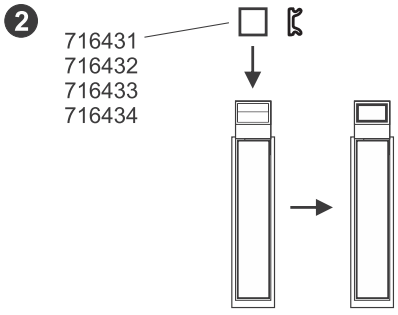
2
716431
716432
716433
716434
716443

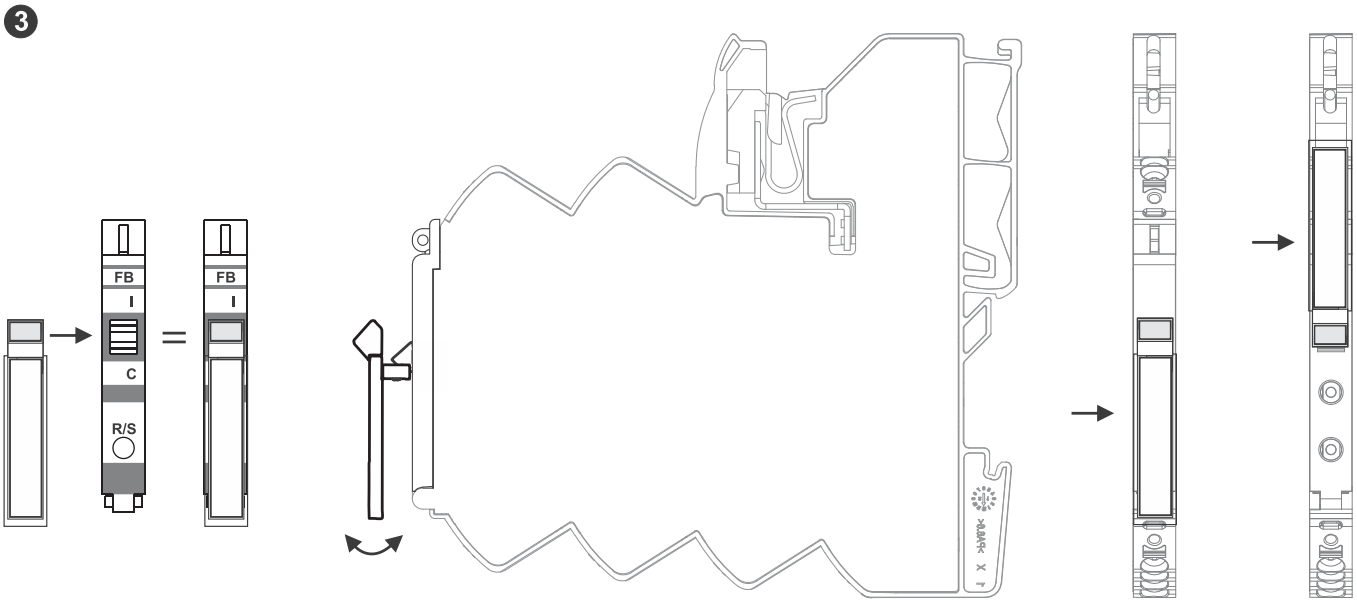
3
FB
I
C
R/S
FB
I

Use

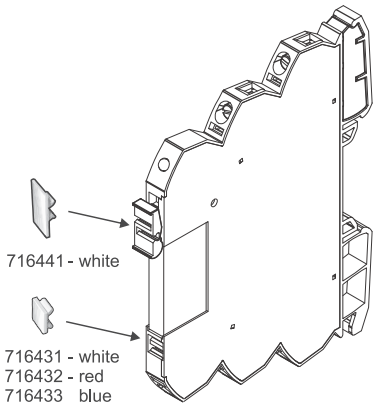
716441 - white
716431 - white
716432 - red
716433 blue

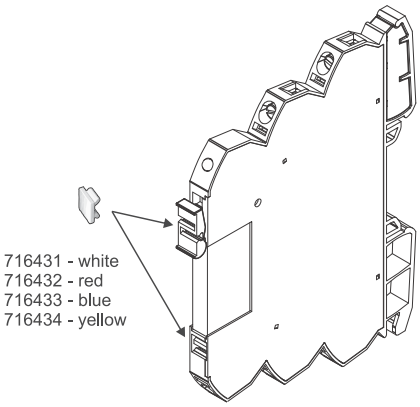
716431 - white
716432 - red
716433 - blue
716434 - yellow

Use

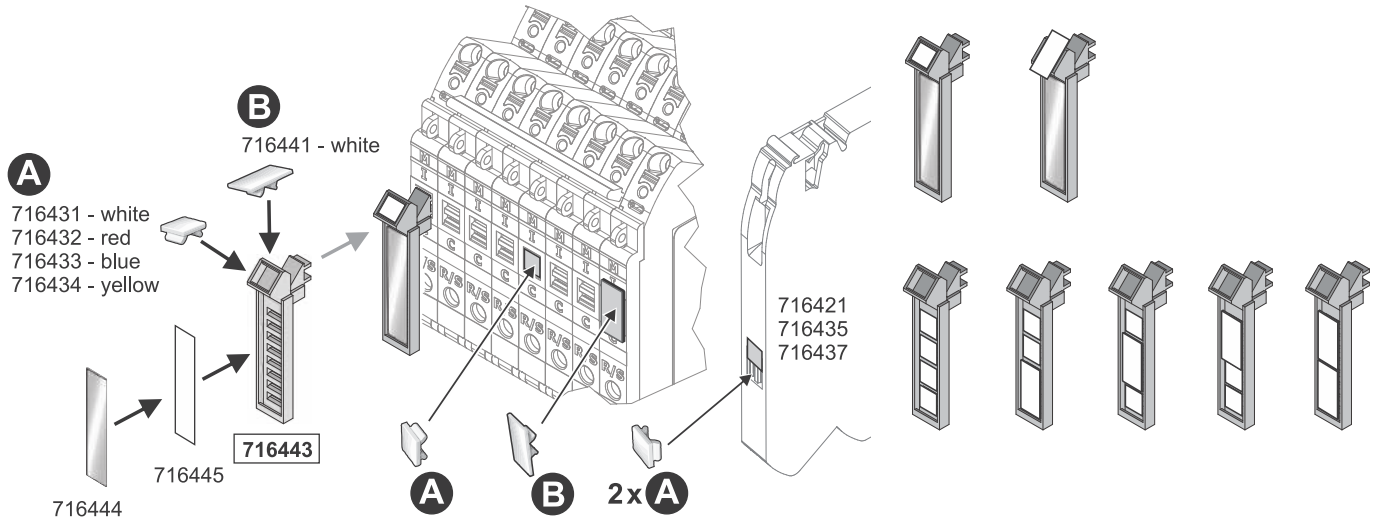
B
716441 - white
A
716431 - white
716432 - red
716433 - blue
716434 - yellow
716443
716445
716444
A
B
2x A
716421
716435
716437

Use

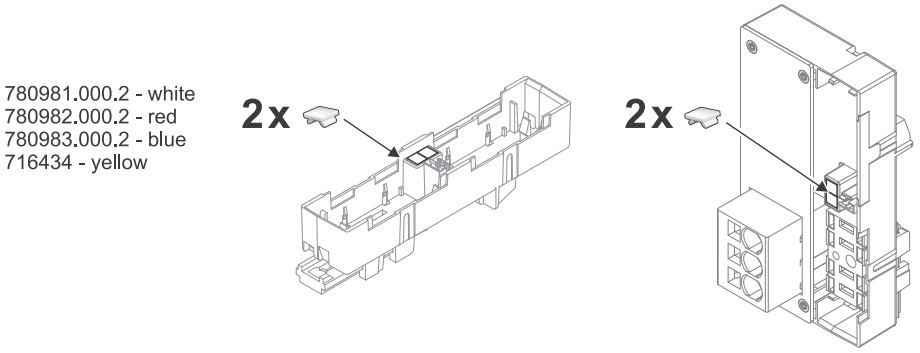
780981.000.2 - white
780982.000.2 - red
780983.000.2 - blue
716434 - yellow
2x
2x

Technical data sheet
LOCC-Box Accessories

Labeling system
Labeling tags 5 × 5 mm
single signs

Identification

Type	LOCC-Box-BZG 7-6434
Part No.	716434

Product version

Datasheet version	02

Description

Description	Terminal marker 5×5 mm, frame with 200 pieces, printable (Dekafix compatible)

General

Accessories	Labelling sign 5x5 mm yellow
Design	200 tabs
Pin spacing	5 mm
Material	PA 6.6 (UL 94 V2)
Color	yellow
Installation position	Any
Flamability according to UL 94	V2
Dimensions	5 × 5 mm
MTBF	690000 h
Weight/unit	0.01 kg
PU (units)	1

Technical data sheet
LOCC-Box Accessories

General ambient conditions

Operation temperature range	-40 °C … +100 °C
Storage temperature range	-40 °C … +100 °C

Certifications/Standards

Conformity	RoHS
Certifications	UL 94 V2

Notes and Comments

Note	halogen-free

Dimensions

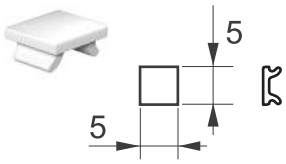

Use

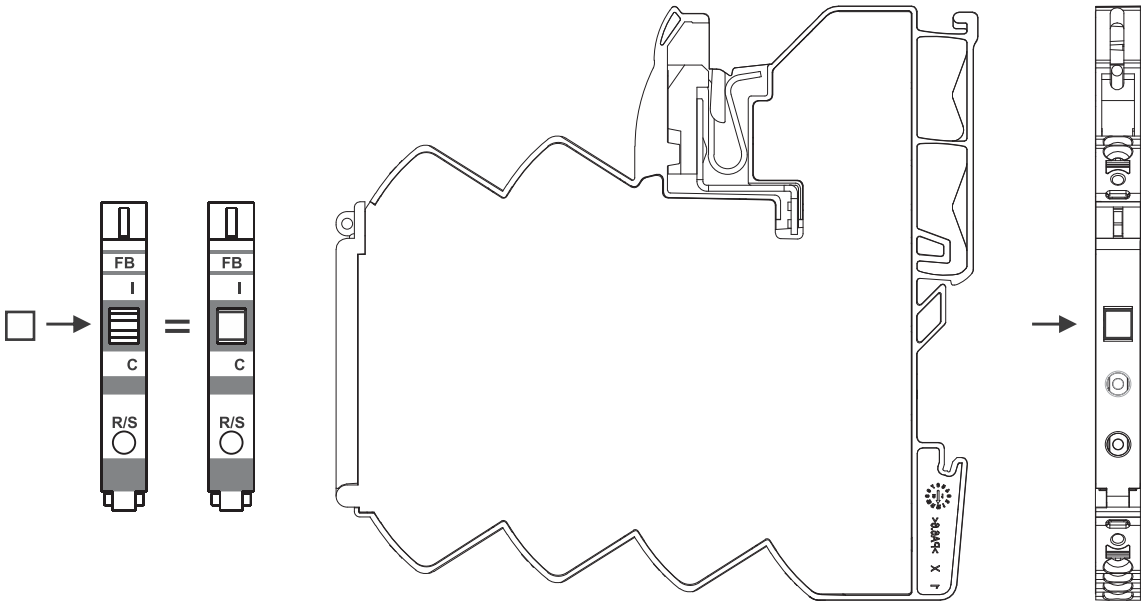

Use

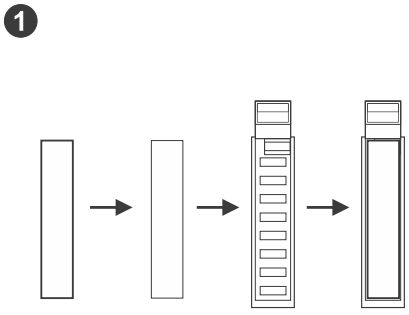
1
716444
716445
716443

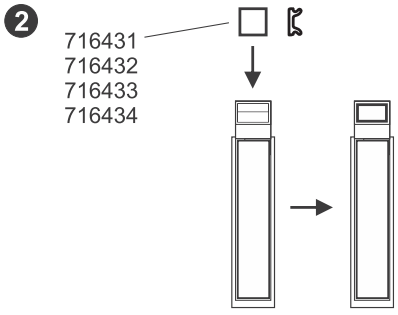
2
716431
716432
716433
716434
716443

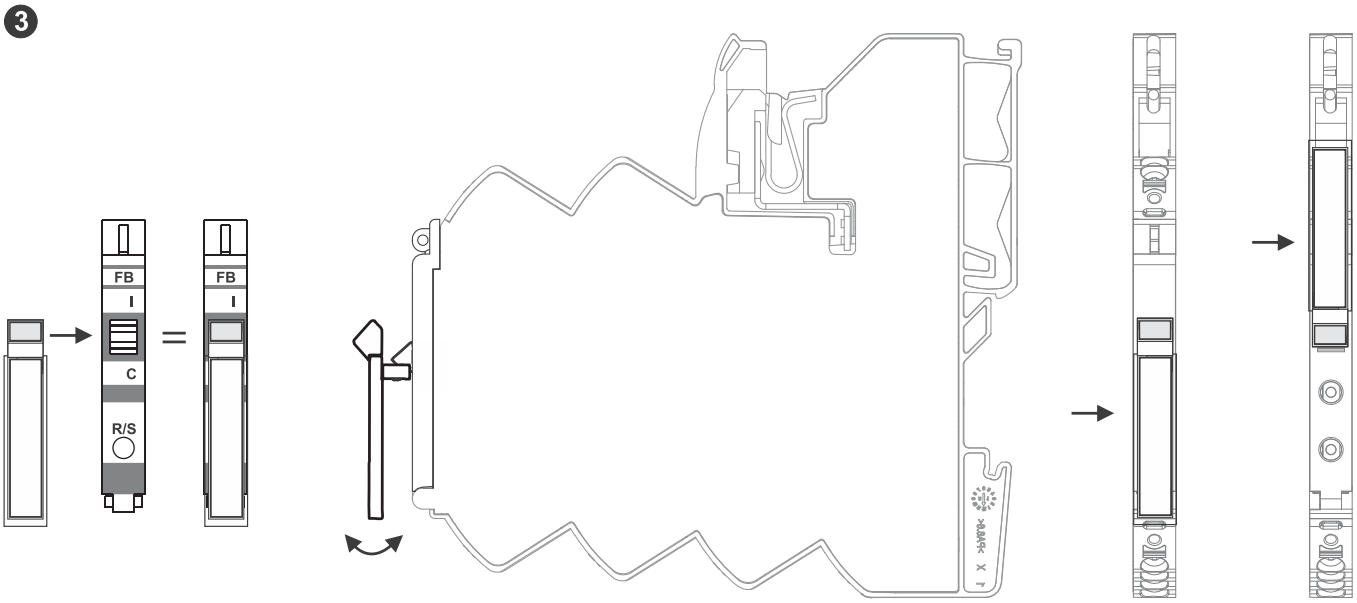
3
FB
I
C
R/S
FB
I

Use

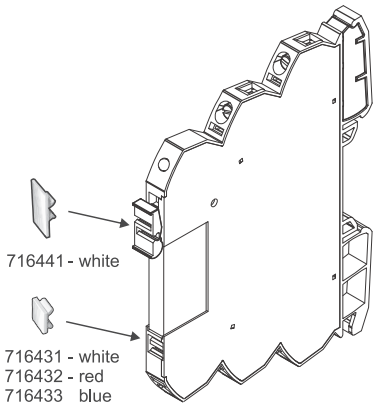
716441 - white
716431 - white
716432 - red
716433 blue

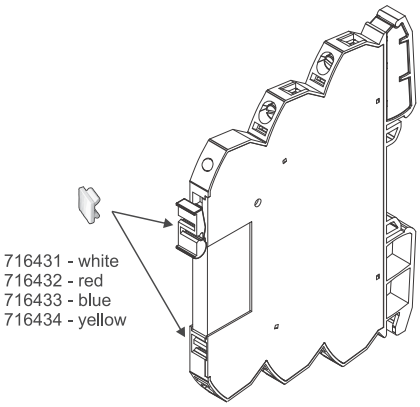
716431 - white
716432 - red
716433 - blue
716434 - yellow

Use

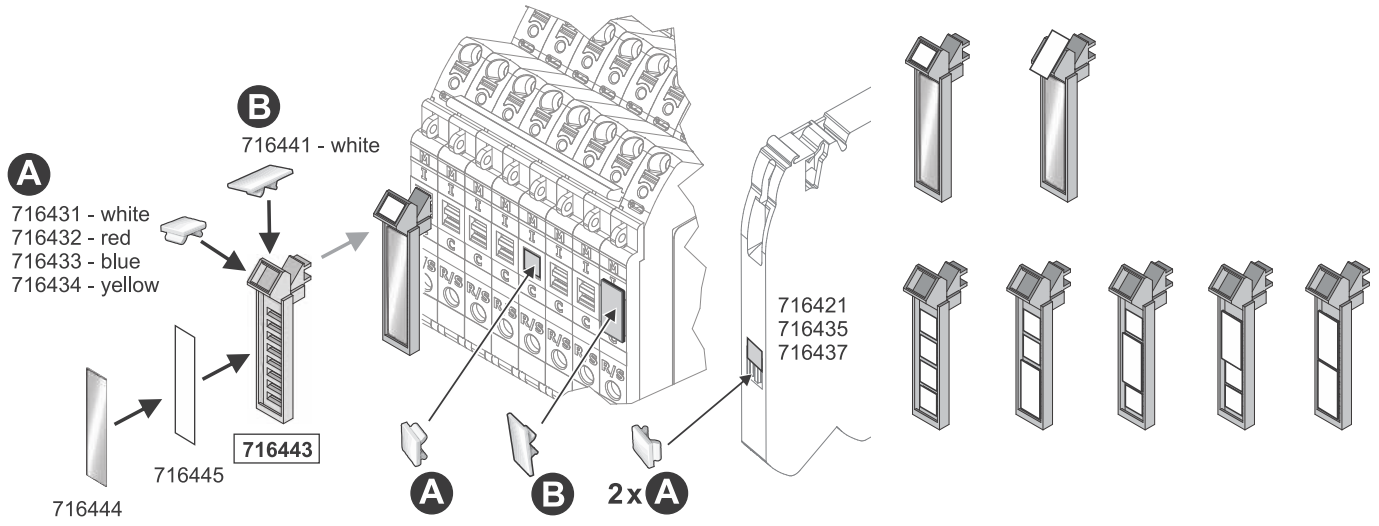
B
716441 - white
A
716431 - white
716432 - red
716433 - blue
716434 - yellow
716444
716445
716443
A
B
2x A
716421
716435
716437

Use

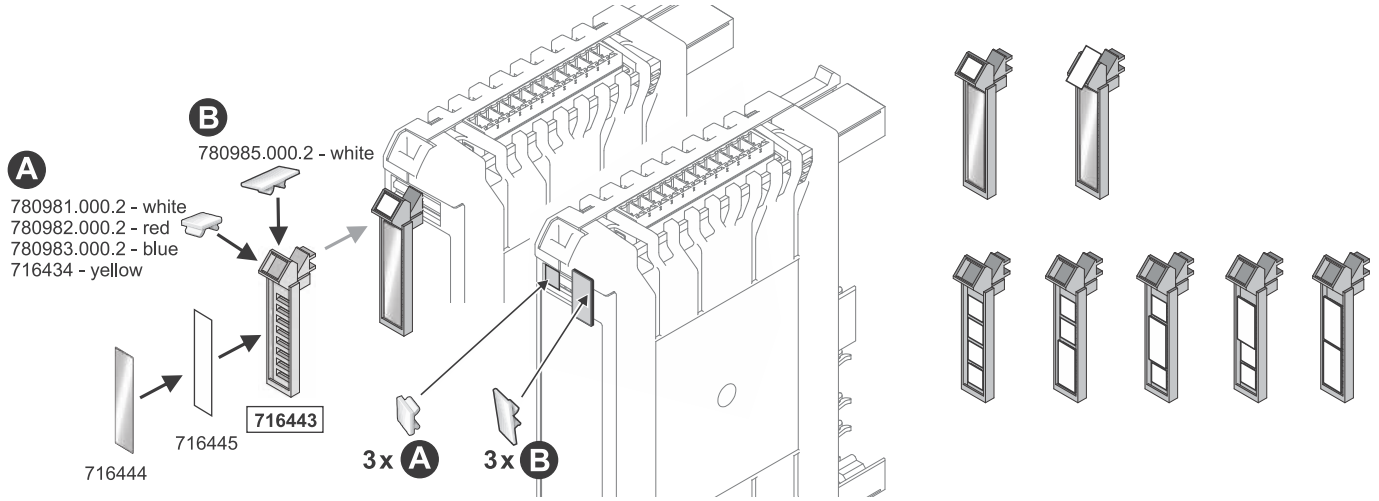
B
780985.000.2 - white
A
780981.000.2 - white
780982.000.2 - red
780983.000.2 - blue
716434 - yellow
716444
716445
716443
3x A
3x B

Use

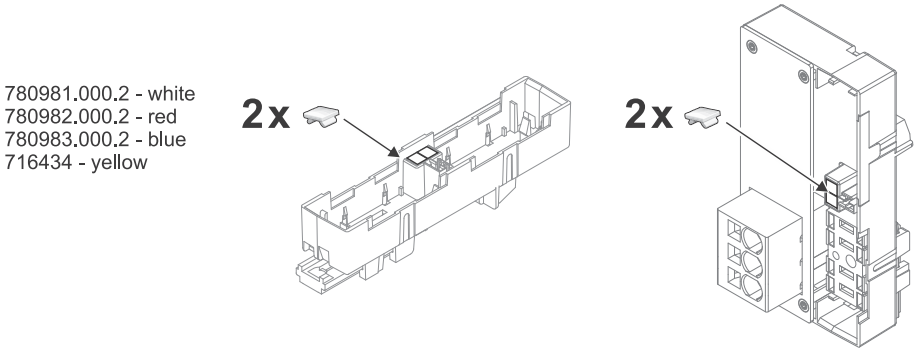
780981.000.2 - white
780982.000.2 - red
780983.000.2 - blue
716434 - yellow
2x
2x

LOCC-Box supply terminal
Maximum total current 40 A (UL: 35 A)

Identification

Type	LOCC-Box-EKL 7-6435
Part No.	716435

Product version

Hardware revision	2.0
Datasheet version	03

Input

Rated voltage U_N	DC 12/24/48 V
Rated current I_N	Max. DC 40 A
Reverse voltage protection	No
Connection type input	Push-In 0.5 mm² – 10 mm² UL Values/stranded AWG 14 – AWG 8
Conductor connection cross section	Single-wire: max. 10 mm² Finely stranded: max 10 mm² Finely stranded with AEH: max 6 mm²
Strip length	13 mm

Output

Rated voltage U_N	DC 12/24/48 V
Output current	Max. DC 40 A
Connection type output	Screwless contact slide
Copper bus bar	3 × 10mm

General

Accessories	Supply terminal 10 mm²
Connection type	Push-In Single wire/fine wire 0.50 mm² – 10.0 mm² AWG 22 – AWG 7 Fine stranded wire with ferrule Finely stranded, ferrule with plastic collar 0.5 mm² – 6 mm² AWG 22 – AWG 9 UL Values AWG 14 – AWG 8
Strip length	13 mm
Housing material	PA 6.6 (UL 94 V-0, NFF I2, F2)
Mounting	DIN rail mountable TS35 (EN 60715)
Degree of protection	IP20 (only as complete system with supply terminal, end block and copper rail cover)
Installation position	Any
Dimensions (w × h × d)	10.0 mm × 110.0 mm × 62.0 mm
Weight/unit	0.035 kg
PU (units)	2

General ambient conditions

Operation temperature range	-25 °C … +50 °C
Storage temperature range	-40 °C … +85 °C
Relative air humidity	10 % – 95 %, without condensation
Vibration resistance	4 g acc. to EN 60068-2-6
Shock resistance	15 g acc. EN 60068-2-27

Certifications/Standards

Conformity	CE UKCA
Certifications	cULus (E135145) DNV (TAA0000162)
Standards	UL 60947-5-1 DNV-CG-0339

Dimensions

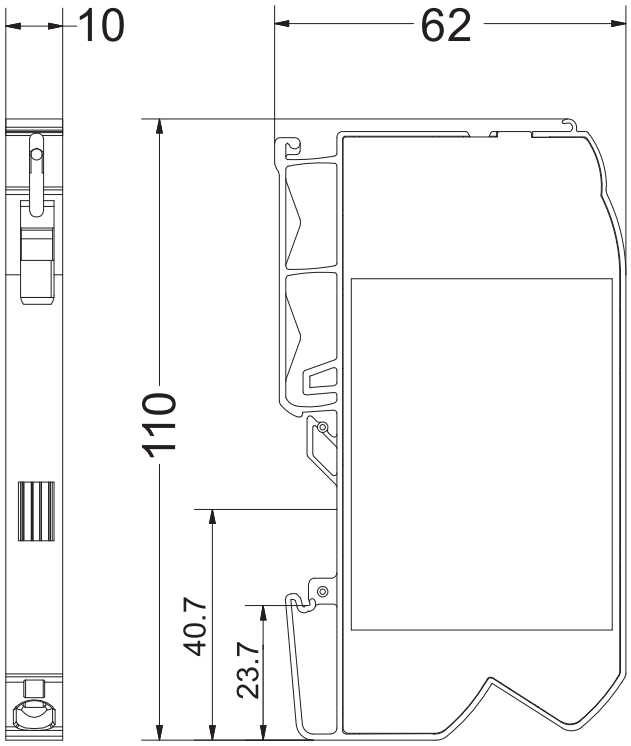

PIN assignment

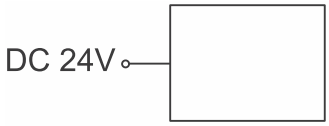

Use

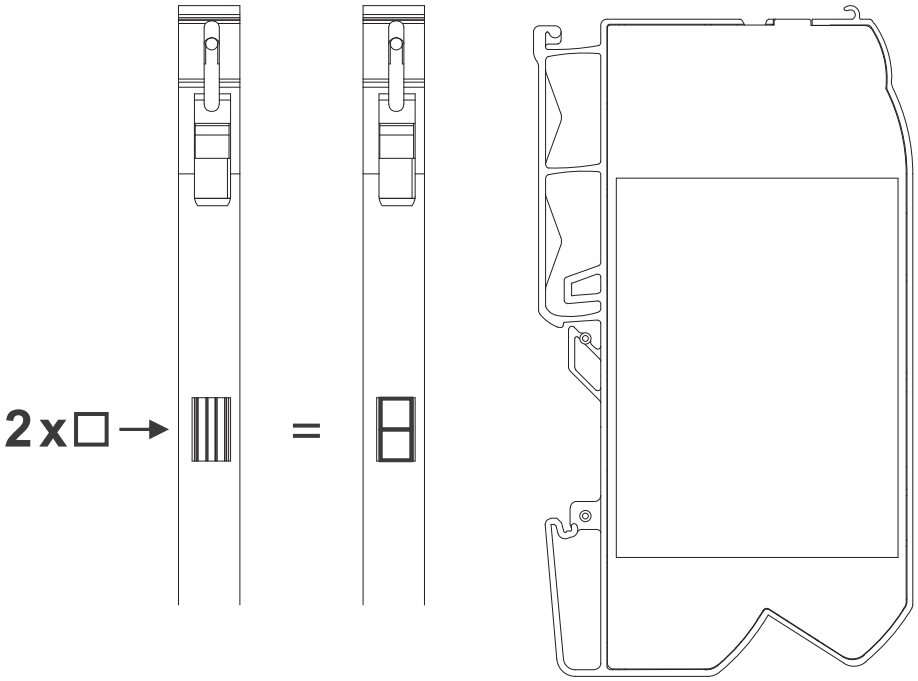

Use

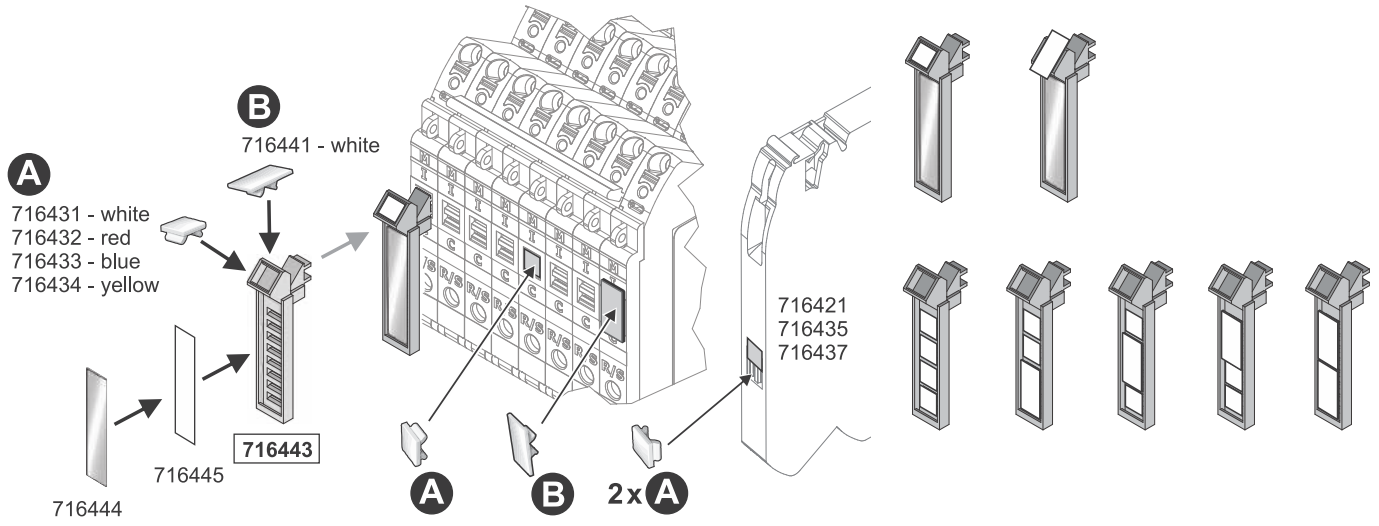

Mounting diagram

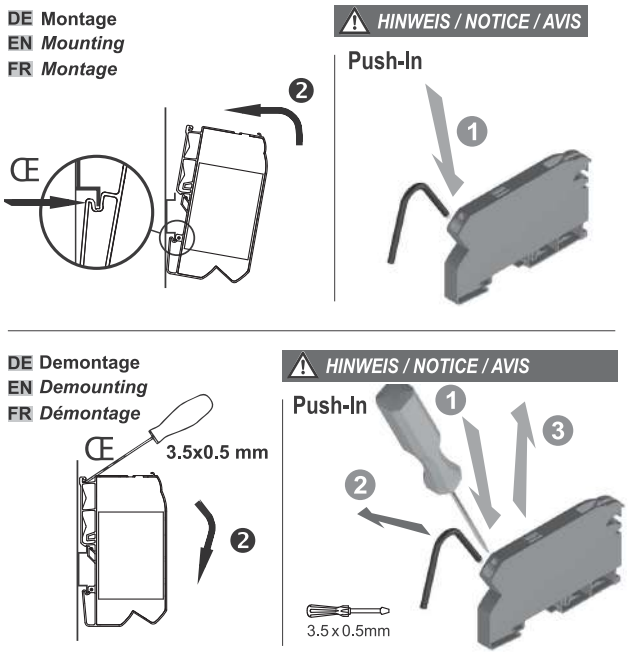

LOCC-Box end block

Identification

Type	LOCC-Box-EB 7-6436
Part No.	716436

Product version

Hardware revision	2.0
Datasheet version	03

General

Accessories	End terminal
Housing material	PA 6.6 (UL 94 V-0, NFF I2, F2)
Mounting	DIN rail mountable TS35 (EN 60715)
Degree of protection	IP20 (only as complete system with supply terminal, end block and copper rail cover)
Installation position	Any
Dimensions (w × h × d)	10.0 mm × 110.0 mm × 62.0 mm
Weight/unit	0.01 kg
PU (units)	2

General ambient conditions

Operation temperature range	-25 °C … +50 °C
Storage temperature range	-40 °C … +85 °C
Relative air humidity	10 % – 95 %, without condensation
Vibration resistance	4 g acc. to EN 60068-2-6
Shock resistance	15 g acc. EN 60068-2-27

Certifications/Standards

Conformity	CE UKCA
Certifications	cULus (E135145) DNV (TAA0000162)
Standards	UL 60947-5-1 DNV-CG-0339

Dimensions

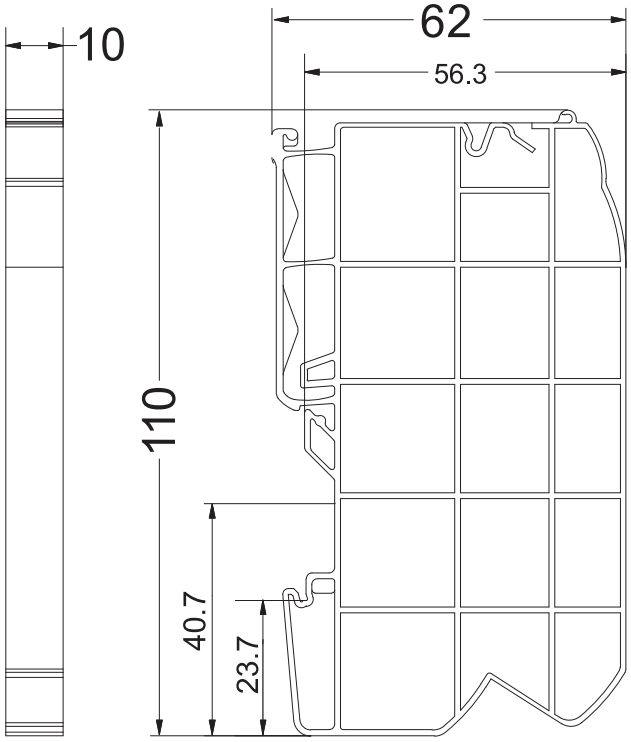

Technical data sheet

Load monitoring · LOCC-Box Accessories

LOCC-Box supply terminal and
LOCC-Box supply terminal for power distribution
maximum total current 40 A (set) (UL: 35 A)

Identification

Type	LOCC-Box-ES 7-6437
Part No.	716437

Product version

Hardware revision	2.0
Datasheet version	02

Input

Rated voltage U_N	DC 12/24/48 V
Rated current I_N	max. DC 40 A
Reverse voltage protection	No
Connection type input	Push-In 0.5 mm² – 10 mm² UL Values/stranded AWG 14 – AWG 8
Conductor connection cross section	single-wire: max. 10 mm² finely stranded: max 10 mm² finely stranded with AEH: max 6 mm²
Strip length	13 mm

Output

Rated voltage U_N	DC 12/24/48 V
Output current	max. DC 40 A
Connection type output	screwless contact slide
Copper bus bar	3 × 10mm

General

Accessories	SET 2 Supply terminal 10 mm² Intermediate feed-in terminal
Connection type	Push-In single wire/fine wire 0.50 mm² – 10.0 mm² AWG 22 – AWG 7 fine stranded wire with ferrule finely stranded, ferrule with plastic collar 0.5 mm² – 6 mm² AWG 22 – AWG 9 UL Values AWG 14 – AWG 8
Strip length	13 mm
Housing material	PA 6.6 (UL 94 V-0, NFF I2, F2)
Mounting	DIN rail mountable TS35 (EN 60715)
Degree of protection	IP20 (only as complete system with power terminal and end block)
Installation position	Any
Dimensions (w × h × d)	10.0 mm × 110.0 mm × 62.0 mm
Weight/unit	0.07 kg
PU (units)	1

General ambient conditions

Operation temperature range	-25 °C … +50 °C
Storage temperature range	-40 °C … +85 °C
Relative air humidity	10 % – 95 %, without condensation
Vibration resistance	4 g acc. to EN 60068-2-6
Shock resistance	15 g acc. EN 60068-2-27

Certifications/Standards

Certifications	cULus (E135145)
Standards	UL 60947-5-1 DNVGL-CG-0339 Temperature Class D – not certified Humidity Class B – not certified Vibration Class B – not certified Enclosure Class A – not certified

Dimensions

716435

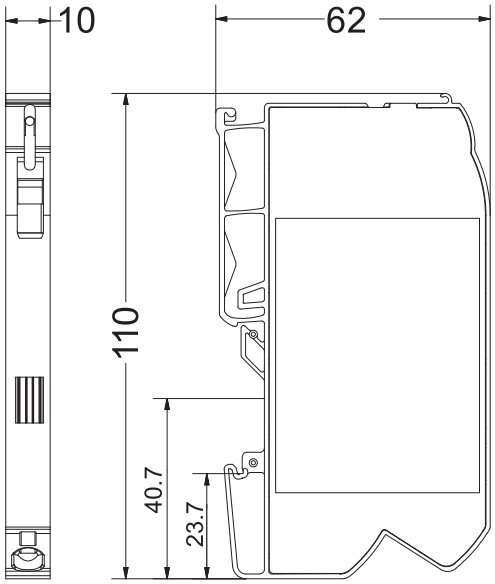

716421

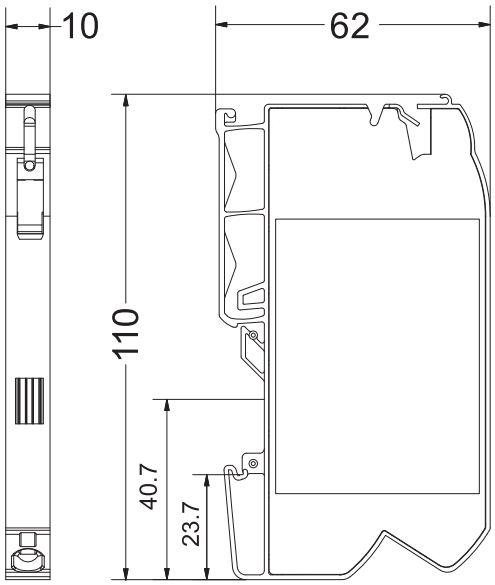

PIN assignment

DC 24V

Use

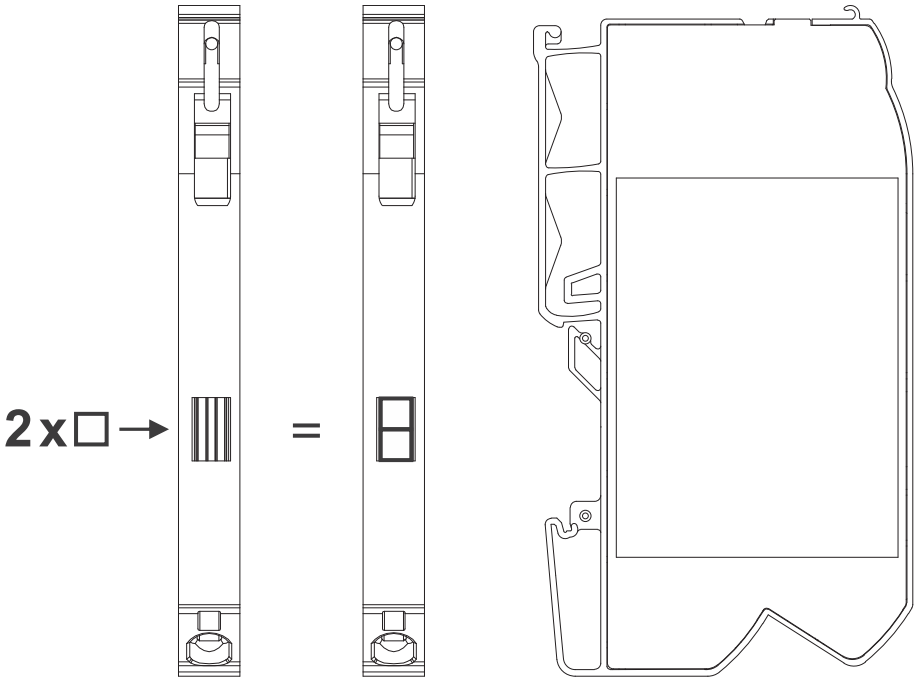

Technical data sheet

Load monitoring · LOCC-Box Accessories

Insulated jumper combs
16-pin

Identification

Type	LOCC-Box-BKW 7-6438
Part No.	716438

Product version

Datasheet version	03

General

Accessories	Jumper comb 16-pin white
Connection type	Plug-in
Contact design	Flat contact 0.5 mm
Pin spacing	8.2 mm
Contact material	FeZn
Material	PVC hard
Color	white
Flamability according to UL 94	V0
Dimensions (w × h × d)	130.0 mm × 3.3 mm × 12.0 mm
Weight/unit	0.006 kg
PU (units)	5

General ambient conditions

Operation temperature range	-40 °C … +80 °C
Storage temperature range	-40 °C … +85 °C
Vibration resistance	4 g acc. to EN 60068-2-6
Shock resistance	15 g acc. EN 60068-2-27

Technical data

Rated current	DC 6 A
Pole number	16

Dimensions

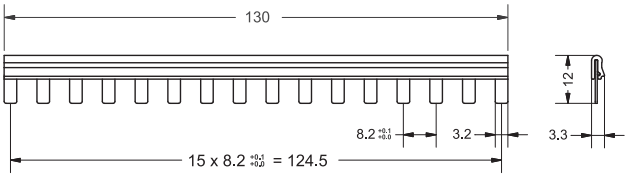

Technical data sheet

Load monitoring · LOCC-Box Accessories

Insulated jumper combs
16-pin

Identification

Type	LOCC-Box-BKR 7-6439
Part No.	716439

Product version

Datasheet version	03

General

Accessories	Jumper comb 16-pin red
Connection type	Plug-in
Contact design	Flat contact 0.5 mm
Pin spacing	8.2 mm
Contact material	FeZn
Material	PVC hard
Color	red
Flamability according to UL 94	V0
Dimensions (w × h × d)	130.0 mm × 3.3 mm × 12.0 mm
Weight/unit	0.006 kg
PU (units)	5

General ambient conditions

Operation temperature range	-40 °C … +80 °C
Storage temperature range	-40 °C … +85 °C
Vibration resistance	4 g acc. to EN 60068-2-6
Shock resistance	15 g acc. EN 60068-2-27

Technical data

Rated current	DC 6 A
Pole number	16

Dimensions

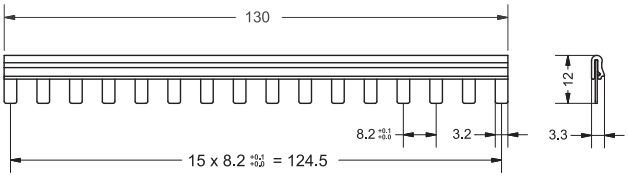

Technical data sheet

Load monitoring · LOCC-Box Accessories

Insulated jumper combs
16-pin

Identification

Type	LOCC-Box-BKB 7-6440
Part No.	716440

Product version

Datasheet version	03

General

Accessories	Jumper comb 16-pin blue
Connection type	Plug-in
Contact design	Flat contact 0.5 mm
Pin spacing	8.2 mm
Contact material	FeZn
Material	PVC hard
Color	blue
Flamability according to UL 94	V0
Dimensions (w × h × d)	130.0 mm × 3.3 mm × 12.0 mm
Weight/unit	0.006 kg
PU (units)	5

General ambient conditions

Operation temperature range	-40 °C … +80 °C
Storage temperature range	-40 °C … +85 °C
Vibration resistance	4 g acc. to EN 60068-2-6
Shock resistance	15 g acc. EN 60068-2-27

Technical data

Rated current	DC 6 A
Pole number	16

Dimensions

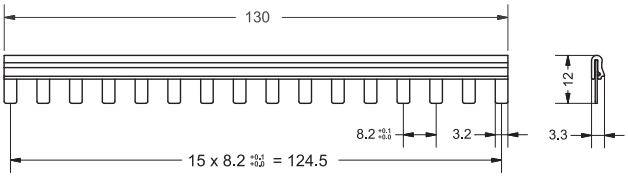

Technical data sheet

Load monitoring · LOCC-Box Accessories

Labelling system
Labelling plates 12 × 6 mm
12 strips à 10 signs

Identification

Type	LOCC-Box-BZW 7-6441
Part No.	716441

Product version

Datasheet version	02

Description

Description	Terminal marker 6×12 mm, frame with 120 pieces, printable (MultiCard format, for MultiCard printer systems

General

Accessories	Labelling sign 6x12 mm white
Design	Frame with 12 strips à 10 tabs
Pin spacing	6 mm
Material	PA6.6 (UL 94 V2)
Color	white
Installation position	Vertical
Flamability according to UL 94	V2
Dimensions	6 × 12 mm
MTBF	690000 h
Weight/unit	0.1 kg
PU (units)	1

General ambient conditions

Operation temperature range	-40 °C … +100 °C
Storage temperature range	-40 °C … +100 °C
Vibration resistance	0.7 g acc. to EN 60068-2-6
Shock resistance	15 g acc. EN 60068-2-27

Certifications/Standards

Conformity	RoHS
Certifications	UL 94
Standards	EN 60947-1

Notes and Comments

Note	halogen-free

Dimensions

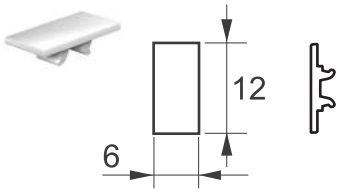

Use

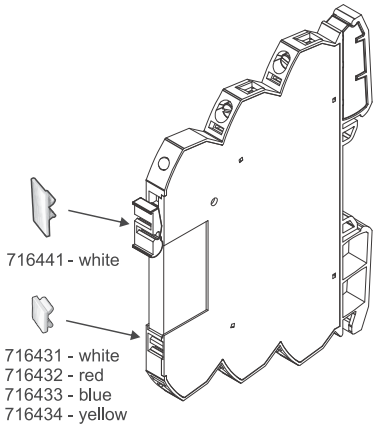

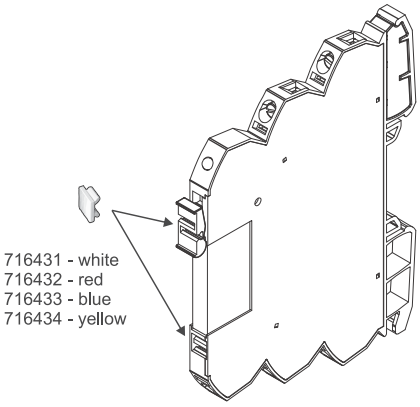

Use

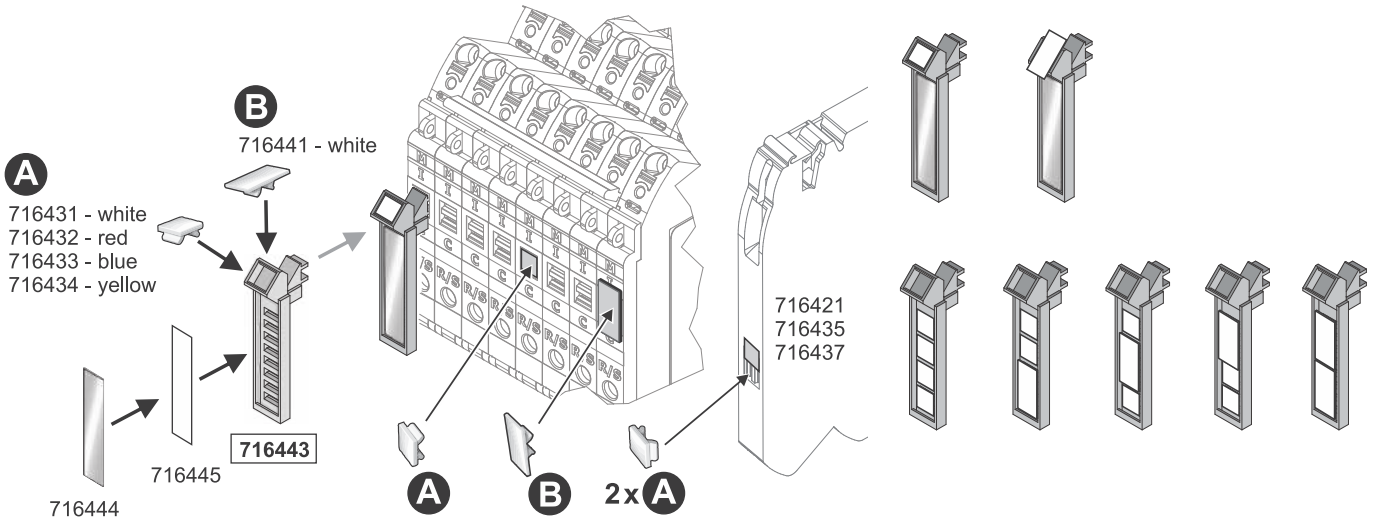
B
716441 - white
A
716431 - white
716432 - red
716433 - blue
716434 - yellow
716443
716445
716444
A
B
2x A
716421
716435
716437

Technical data sheet

Load monitoring · LOCC-Box Accessories

Labelling system
Group plate holder
Single labels

Identification

Type	LOCC-Box-BZT 7-6443
Part No.	716443

Product version

Datasheet version	02

Description

Description	Article 716443 is a swiveling group marker holder for a pluggable marker (article 716445) and a transparent cover strip (716444). In addition, a (printed) terminal marker can be plugged in, if necessary for color coding (article 716431 - white, 716432 - red, 716433 - blue, 716434 - yellow). (See also the application examples in this data sheet).

General

Accessories	Tag holder
Design	Tag holder
Pin spacing	7 mm
Material	PA6.6 (UL 94 V2)
Color	white
Flamability according to UL 94	V2
Dimensions	38.2 × 8.0 × 14.7 mm
MTBF	690000 h
Weight/unit	0.00045 kg
PU (units)	20

General ambient conditions

Operation temperature range	-25 °C … +50 °C
Storage temperature range	-40 °C … +85 °C
Vibration resistance	0.7 g acc. to EN 60068-2-6
Shock resistance	15 g acc. EN 60068-2-27

Certifications/Standards

Conformity	RoHS
Standards	EN 60947-1

Dimensions

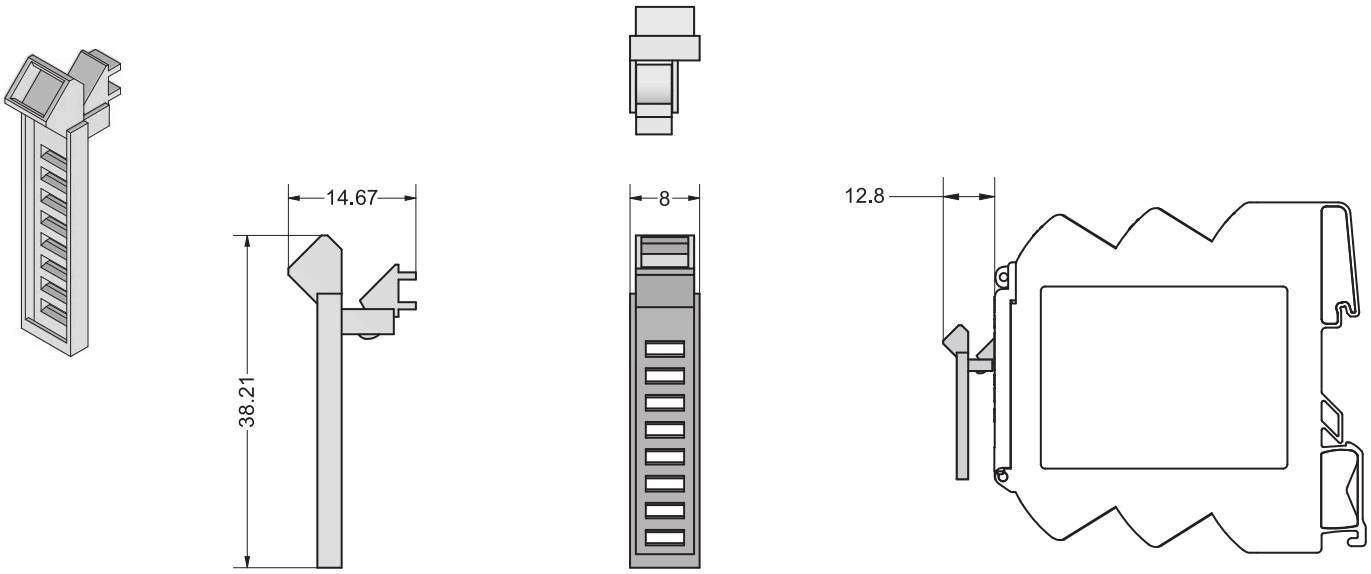

Use

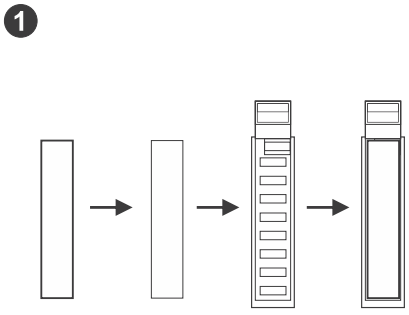
1
716444
716445
716443

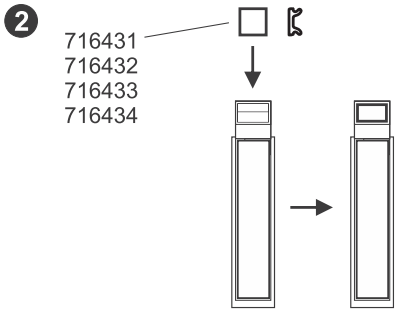
2
716431
716432
716433
716434
716443

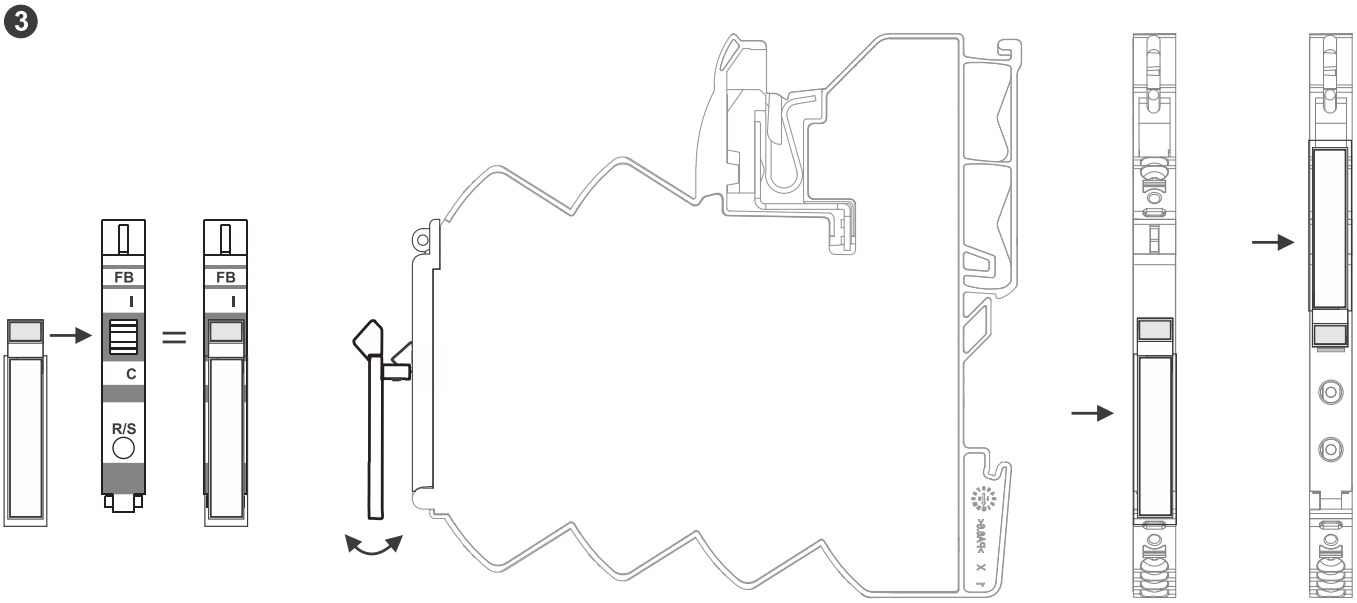
3
FB
I
C
R/S
FB
I

Use

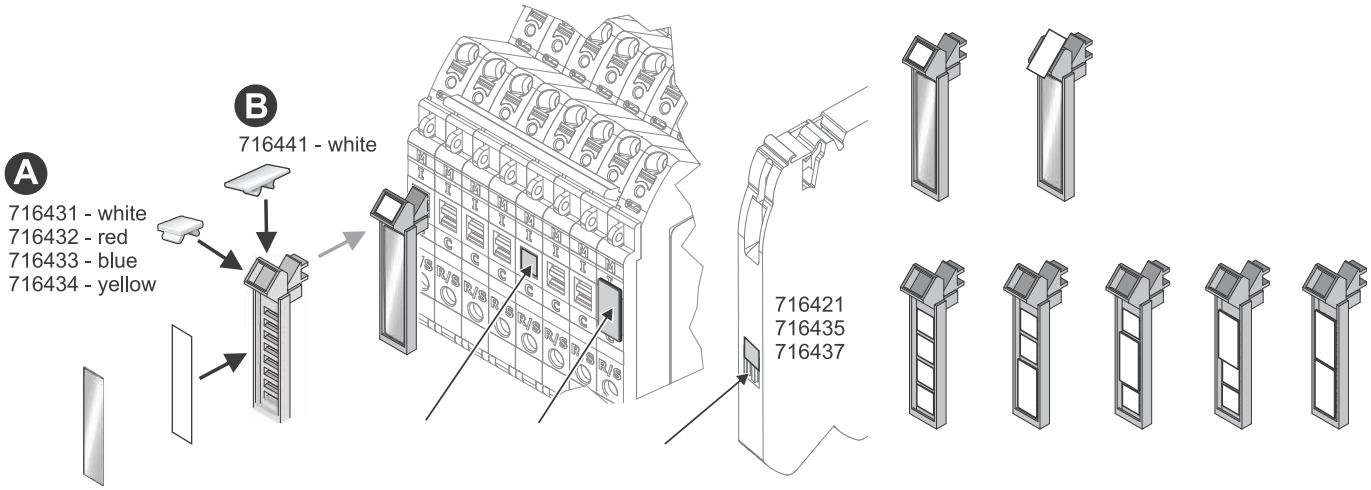
A
716431 - white
716432 - red
716433 - blue
716434 - yellow
B
716441 - white
716421
716435
716437

Use

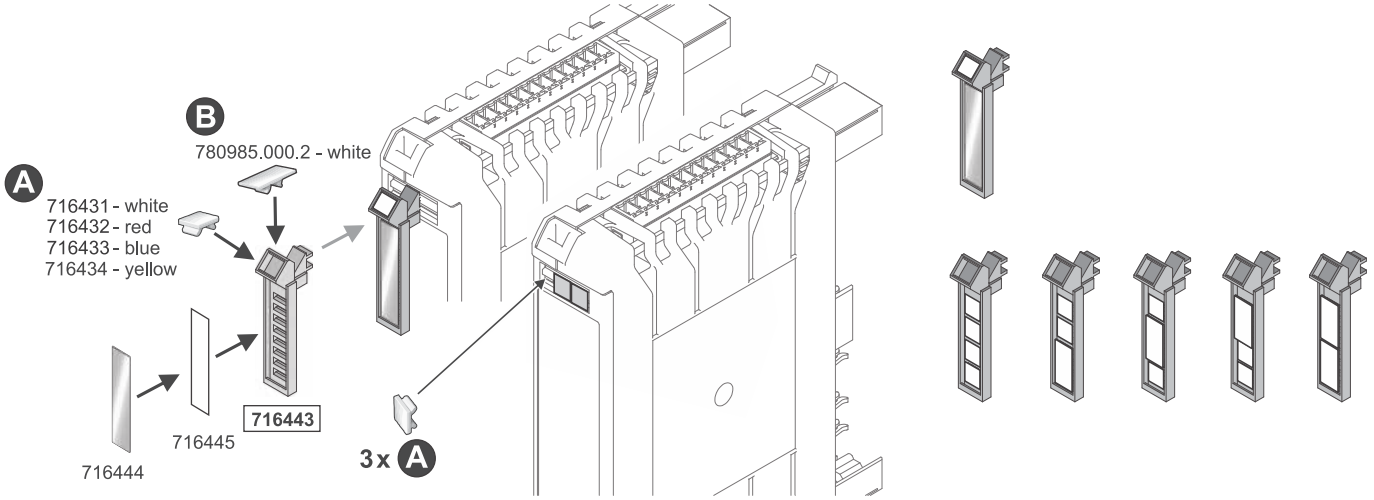
B
780985.000.2 - white
A
716431 - white
716432 - red
716433 - blue
716434 - yellow
716443
716445
716444
3 x A

Technical data sheet

Load monitoring · LOCC-Box Accessories

Labelling system
Protective cap, 30 x 6 x 0.7 mm
Single labels

RoHS

Identification

Type	LOCC-Box-BAD 7-6444
Part No.	716444

Product version

Datasheet version	02

Description

Description	Transparent protective film for insertion labels (716445)

General

Accessories	Cover for tag holder
Design	Cover for tag holder
Material	Polyester PVC free
Color	transparent
Dimensions (L×H×T)	30,0 × 6,0 × 0,7 mm
MTBF	690000 h
Weight/unit	0.00015 kg
PU (units)	20

General ambient conditions

Operation temperature range	-25 °C … +50 °C
Storage temperature range	-40 °C … +85 °C
Vibration resistance	0.7 g acc. to EN 60068-2-6

Shock resistance	15 g acc. EN 60068-2-27

Certifications/Standards

Conformity	RoHS
Standards	EN 60947-1

Dimensions

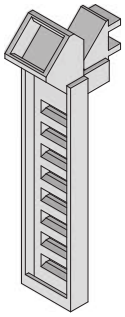

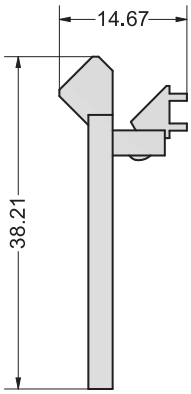

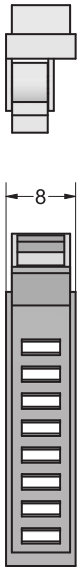

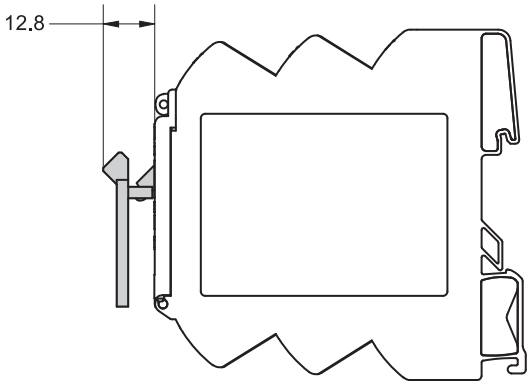

Use

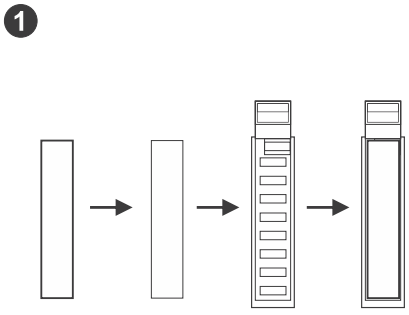
1
716444
716445
716443

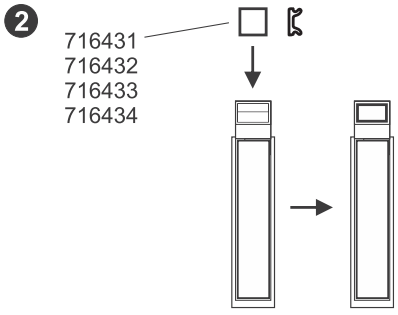
2
716431
716432
716433
716434
716443

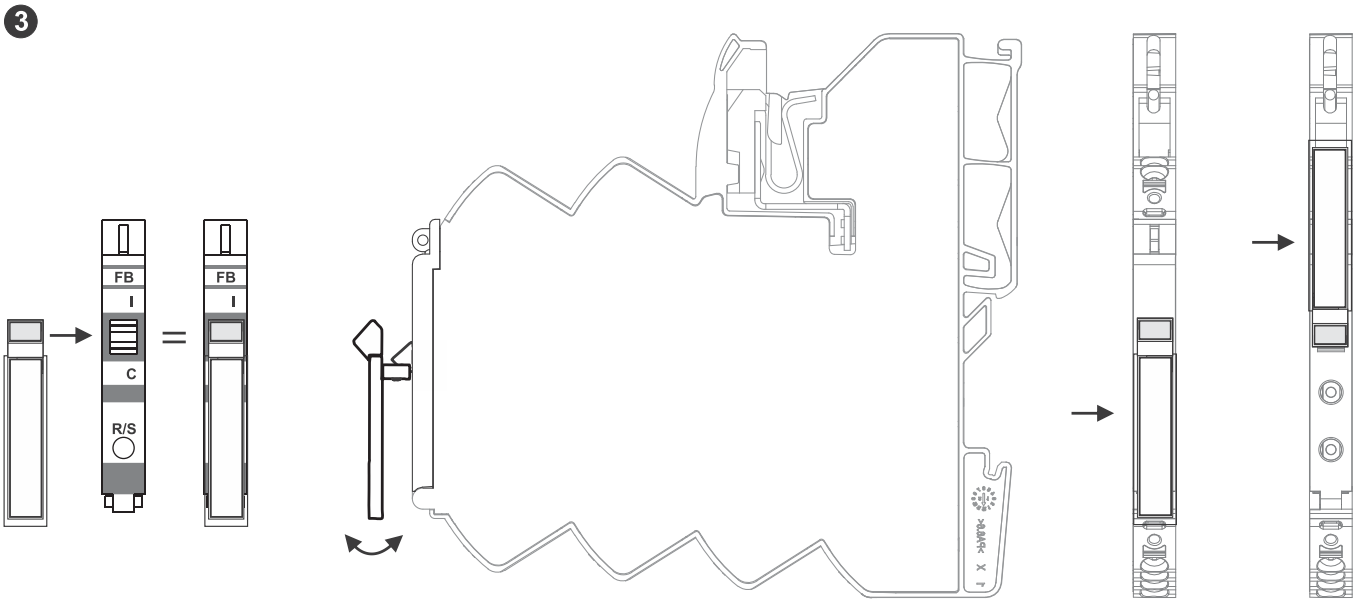
3
FB
I
C
R/S
FB
I

Use

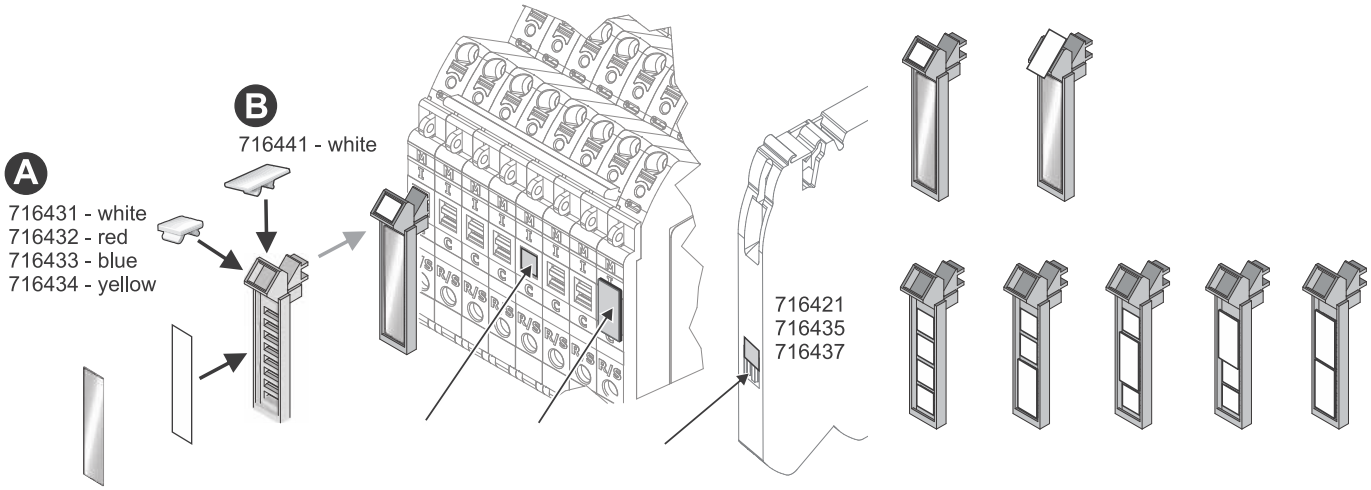
A
716431 - white
716432 - red
716433 - blue
716434 - yellow
B
716441 - white
716421
716435
716437

Use

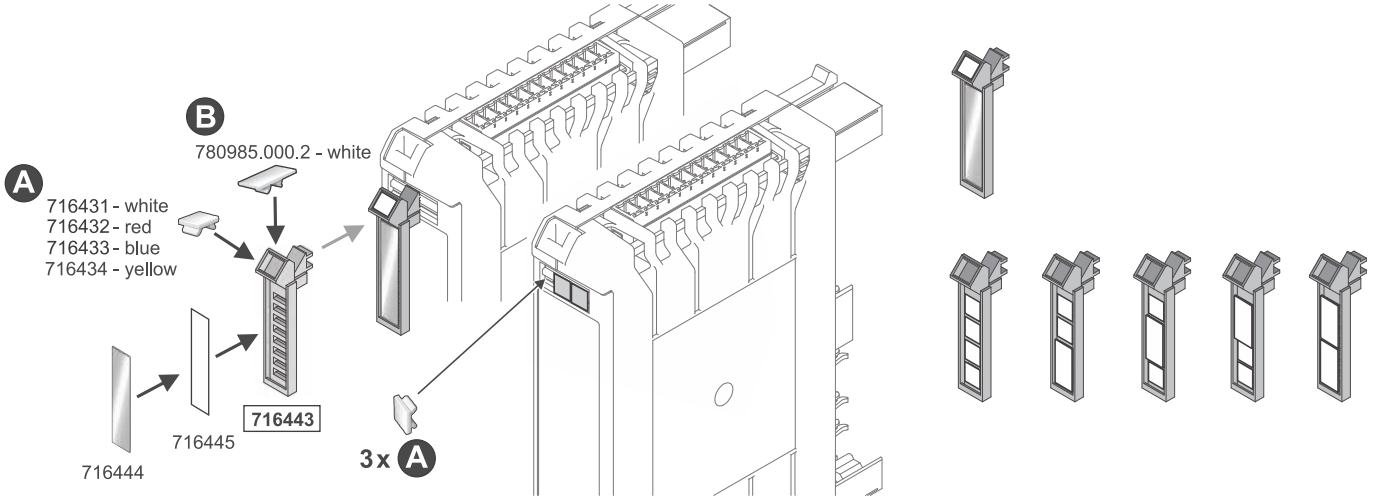
B
780985.000.2 - white
A
716431 - white
716432 - red
716433 - blue
716434 - yellow
716443
716445
716444
3 x A

Technical data sheet

Load monitoring · LOCC-Box Accessories

Labelling system
Insert, 30 x 6 x 0.3 mm
240 labels

RoHS

Identification

Type	LOCC-Box-LEB 7-6445
Part No.	716445

Product version

Datasheet version	02

Description

Description	Insertable labels made of paper for labeling terminals, suitable for group label holder (716443), color white

General

Accessories	Material name
Design	DIN A 4 sheets with 240 single labels
Material	Paper
Color	white
Flamability according to UL 94	HB
Dimensions (L×H×T)	30,0 × 6,0 × 0,3 mm
MTBF	690000 h
Weight/unit	0.0105 kg
PU (units)	10

General ambient conditions

Operation temperature range	-25 °C . . . +70 °C
Storage temperature range	-40 °C . . . +80 °C

Vibration resistance	0.7 g acc. to EN 60068-2-6
Shock resistance	15 g acc. EN 60068-2-27

Certifications/Standards

Conformity	RoHS
Standards	EN 60947-1

Use

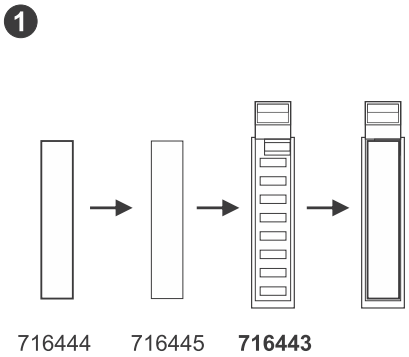

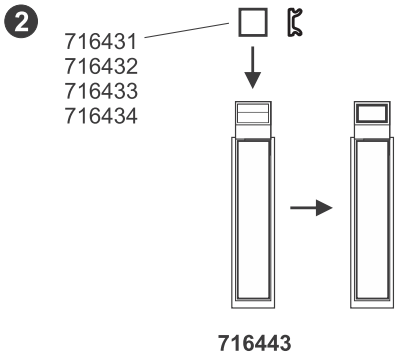

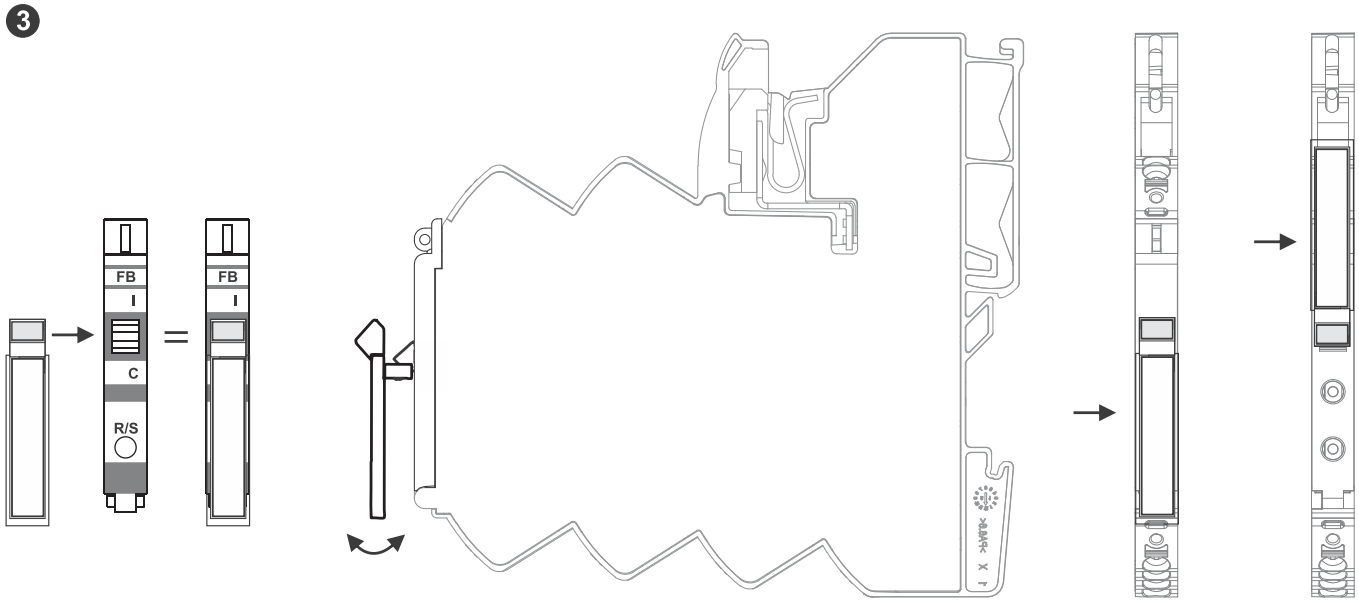

Use

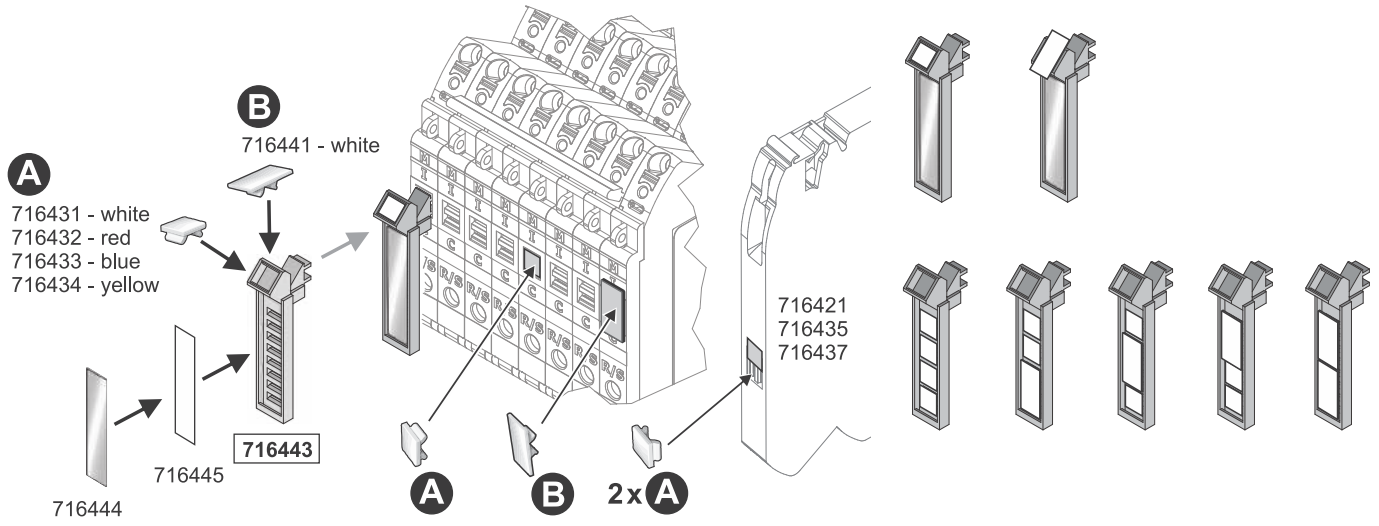
B
716441 - white
A
716431 - white
716432 - red
716433 - blue
716434 - yellow
716444
716445
716443
A
B
2x A
716421
716435
716437

Use

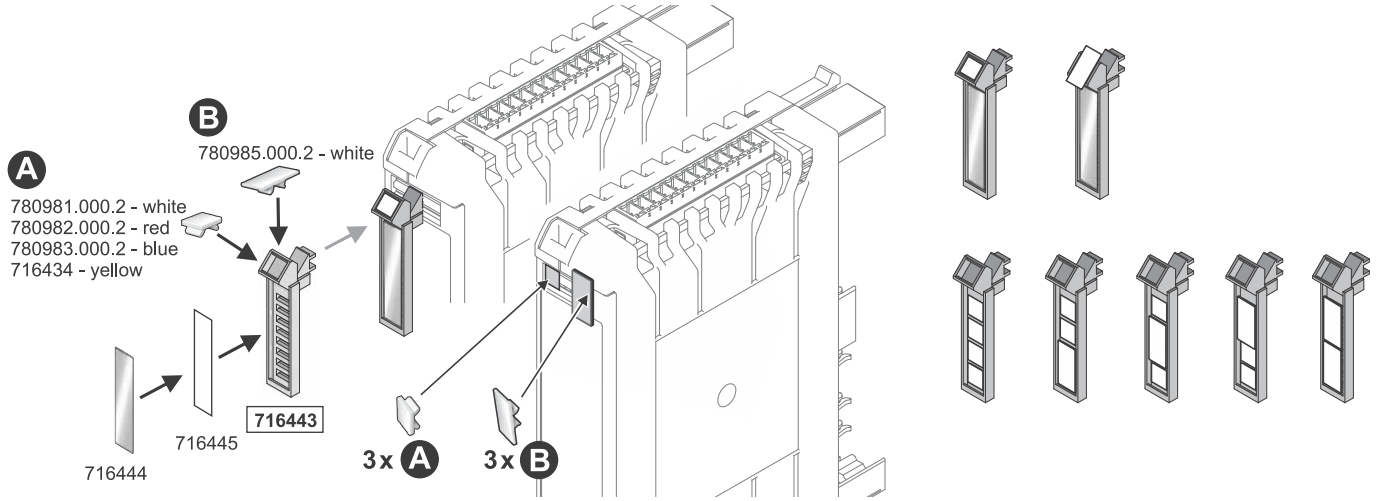
B
780985.000.2 - white
A
780981.000.2 - white
780982.000.2 - red
780983.000.2 - blue
716434 - yellow
716444
716445
716443
3x A
3x B

Technical data sheet

LOCC-Box Accessories

Labeling system
Labeling tags 5 × 5 mm
Single signs, printed 1 - 50

Identification

Type	LOCC-Box-BZW 7-6446
Part No.	716446

Product version

Datasheet version	00

Description

Description	Ready-to-use marking labels 5×5 mm, printed with 1 - 50, color white, 1 frame with 50 labels (compatible with Dekafix).

General

Accessories	Labelling sign 5x5 mm white
Design	Single sign
Pin spacing	5 mm
Material	PA 6.6 (UL 94 V2)
Color	white
Flamability according to UL 94	V2
Dimensions	5 × 5 mm
MTBF	690000 h
Weight/unit	0.01 kg
PU (units)	1

Technical data sheet
LOCC-Box Accessories

General ambient conditions

Operation temperature range	-40 °C … +100 °C
Storage temperature range	-40 °C … +100 °C

Certifications/Standards

Conformity	RoHS
Certifications	UL 94 V2

Notes and Comments

Note	halogen-free

Dimensions

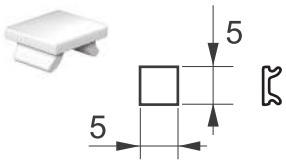

Use

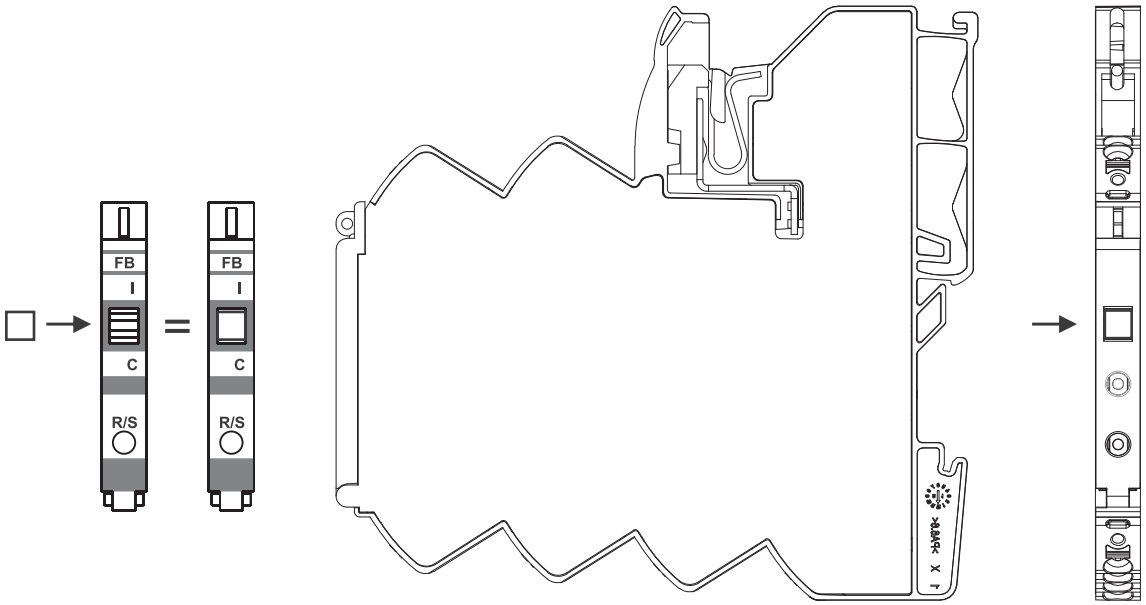

Use

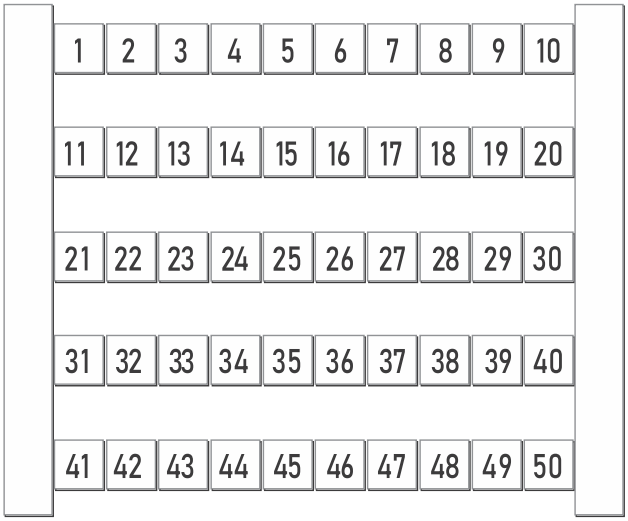
1 2 3 4 5 6 7 8 9 10
11 12 13 14 15 16 17 18 19 20
21 22 23 24 25 26 27 28 29 30
31 32 33 34 35 36 37 38 39 40
41 42 43 44 45 46 47 48 49 50

Use

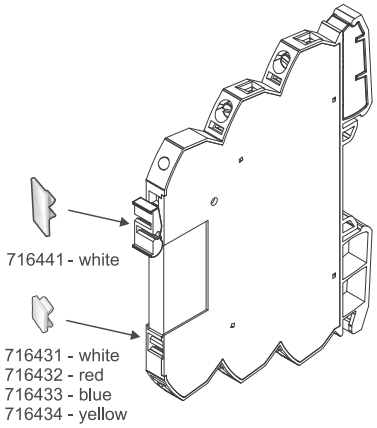
716441 - white
716431 - white
716432 - red
716433 - blue
716434 - yellow

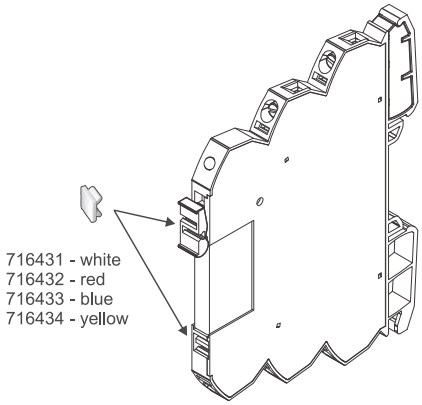
716431 - white
716432 - red
716433 - blue
716434 - yellow

Technical data sheet

Load monitoring · LOCC-Box Accessories

LOCC-Box supply set 16 mm²
Consisting of supply terminal and end block
Maximum total current 40 A (UL: 35 A)

Identification

Type	LOCC-Box-ES16 7-6447
Part No.	716447

Product version

Datasheet version	02

Input

Rated voltage U_N	DC 12/24/48 V
Rated current I_N	Max. DC 40 A
Reverse voltage protection	No
Connection type input	Spring terminal 0.33 mm² – 16 mm² AWG 22 – AWG 6
Conductor connection cross section	Single-wire: max. 16 mm² Finely stranded: max 10 mm² Finely stranded with AEH: max 10 mm²
Strip length	18 mm

Output

Rated voltage U_N	DC 12/24/48 V
Output current	Max. DC 40 A
Connection type output	Screwless contact slide
Copper bus bar	3 × 10mm

General

Accessories	Supply set 16 mm²
Connection type	Spring terminal Single wire/fine wire 1.50 mm² – 16 mm² AWG 16 – AWG 5 Fine stranded wire with ferrule Finely stranded, ferrule with plastic collar 1.5 mm² – 10 mm² AWG 16 – AWG 7 UL Values AWG 14 – AWG 6
Strip length	18 mm
Housing material	PA 6.6 (UL 94 V-0, NFF I2, F2)
Mounting	DIN rail mountable TS35 (EN 60715)
Degree of protection	IP20 (only as complete system with supply terminal, end block and copper rail cover)
Installation position	Any
Dimensions (w × h × d)	11.7 mm × 119.5 mm × 62.0 mm 10.0 × 119.5 × 62.0 mm
Weight/unit	0.045 kg
PU (units)	1

General ambient conditions

Operation temperature range	-25 °C … +50 °C
Storage temperature range	-40 °C … +85 °C
Relative air humidity	10 % – 95 %, without condensation
Vibration resistance	4 g acc. to EN 60068-2-6
Shock resistance	15 g acc. EN 60068-2-27

Certifications/Standards

Certifications	cULus (E135145)
Standards	UL 60947-5-1 DNVGL-CG-0339 Temperature Class D – not certified Humidity Class B – not certified Vibration Class B – not certified Enclosure Class A – not certified

Dimensions

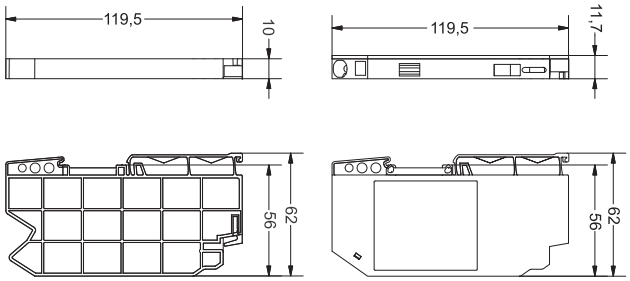

DE Endblock
EN *End block*
FR *Bloc d'extrémité*

DE Einspeiseklemme
EN *Supply terminal*
FR *Borne d'alimentation*

PIN assignment

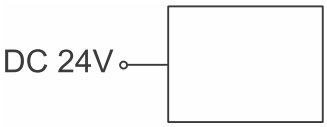

Use

DE Standard Anwendung
EN *Standard Application*
FR *Application standard*

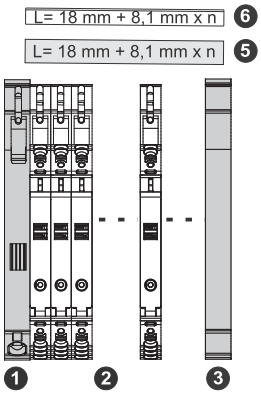

*n= LOCC-Box Module/*Modules*
/Modules

DE Anwendung mit Einspeiseklemme und Einspeisekl. mit Ausbruch mittig
EN *Standard application with supply terminal and supply terminal cutout center*
FR *Application standard avec borne d'alimentation et borne d'alimentation avec encoche au milieu*

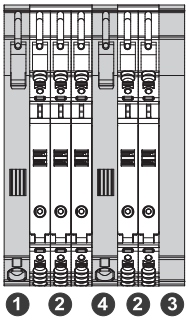

DE Anwendung mit Einspeiseklemme und Einspeisekl. mit Ausbruch rechts
EN *Standard application with supply terminal and supply terminal cutout right*
FR *Application standard avec borne d'alimentation et borne d'alimentation avec encoche à droite*

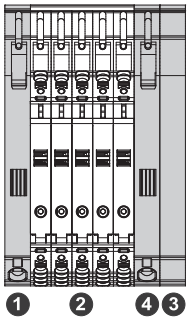

DE Anwendung mit Einspeiseklemme und Einspeisekl. mit Ausbruch links
EN *Standard application with supply terminal and supply terminal cutout left*
FR *Application standard avec borne d'alimentation et borne d'alimentation avec encoche à gauche*

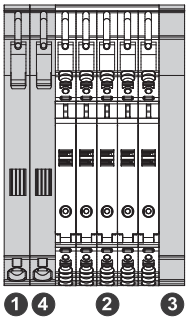

DE

1 Einspeiseklemme aus Set 716425/ 716447
2 Überwachungsbaustein – LOCC-Box
3 Endblock aus Set 716425/ 716447
4 Einspeiseklemme mit Ausbruch (716421)
5 Kupferschiene (716426/ 716426.xxx.x)
6 Abdeckung Kupferschiene (716427)

EN

1 *Supply terminal from set 716425/ 716447*
2 *Monitoring Module – LOCC-Box*
3 *End terminal from set 716425/716447*
4 *Supply Terminal with outage (716421)*
5 *Copper rail (716426/ 716426.xxx.x)*
6 *Cover copper rail (716427)*

FR

1 *La borne de raccordement au réseau se trouve dans le kit 716425/ 716447*
2 *Convertisseur de mesure – LOCC-Box*
3 *Borne d'extrémité est inclus dans le kit 716425/ 716447*
4 *Borne d'alimentation avec encoche (716421)*
5 *Barre de cuivre (716426/ 716426.xxx.x)*
6 *Recouvrement pour rail cuivre (716427)*

Use

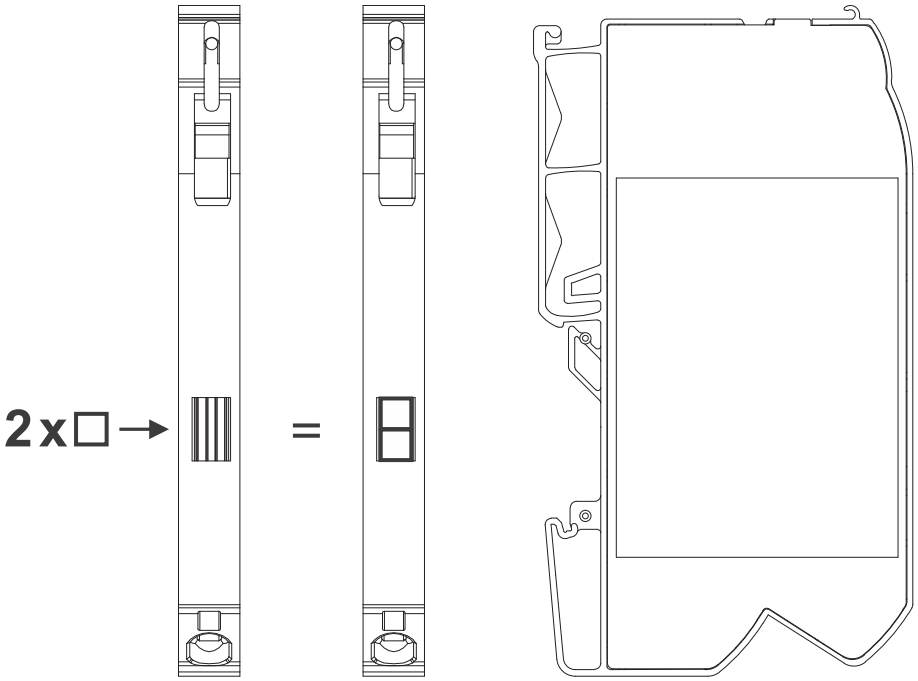
2x
=

Use

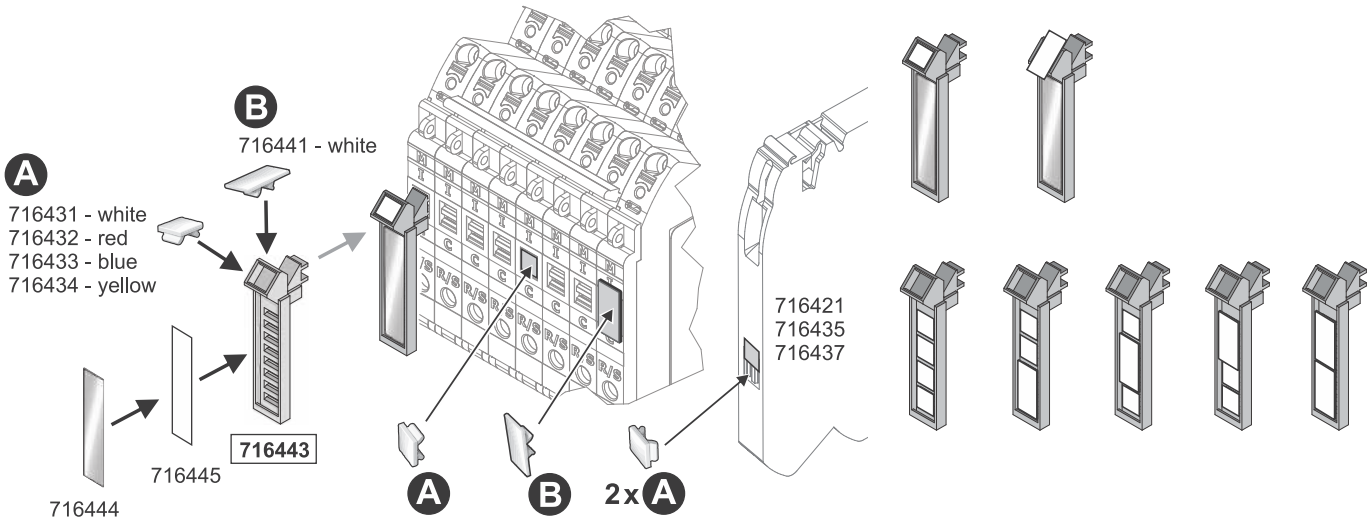
B
716441 - white
A
716431 - white
716432 - red
716433 - blue
716434 - yellow
716443
716445
716444
A
B
2x A
716421
716435
716437

Technical data sheet

Load monitoring · LOCC-Box Accessories

24 V - Distribution terminal
Single-channel design
Maximum total current 10 A

Identification

Type	LOCC-Box-VKL 7-6448
Part No.	716448

Product version

Hardware revision	2.0
Datasheet version	03

Input

Rated voltage U_N	DC 12/24/48 V
Rated current I_N	Max. DC 10 A
Reverse voltage protection	No
Connection type input	Push-In 0.25 mm² – 2.5 mm² AWG 23 – AWG 14
Connection	1 – 4

General

Accessories	24 V Distribution terminal
Connection type	Push-In 0.25 mm² – 2.5 mm² AWG 24 – AWG 14
Housing material	PA 6.6 (UL 94 V-0, NFF I2, F2)
Mounting	DIN rail mountable TS35 (EN 60715)
Degree of protection	IP20 (only as complete system with power terminal and end block)

Installation position	Any
Dimensions (w × h × d)	8.1 mm × 107.4 mm × 116.0 mm
Weight/unit	0.102 kg
PU (units)	2

General ambient conditions

Operation temperature range	-25 °C … +50 °C
Storage temperature range	-40 °C … +85 °C
Relative air humidity	10 % – 95 %, without condensation
Vibration resistance	4 g acc. to EN 60068-2-6
Shock resistance	15 g acc. EN 60068-2-27

Certifications/Standards

Certifications	cULus (E135145)
Standards	EN 60947-1 EN 60947-5-1 UL 60947-5-1 DNVGL-CG-0339 Temperature Class D – not certified Humidity Class B – not certified Vibration Class B – not certified Enclosure Class A – not certified

Dimensions

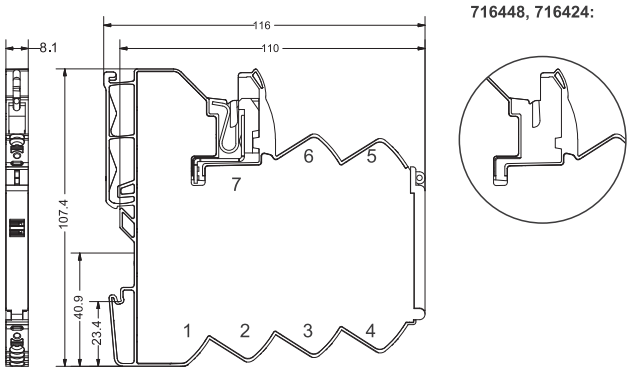

PIN assignment

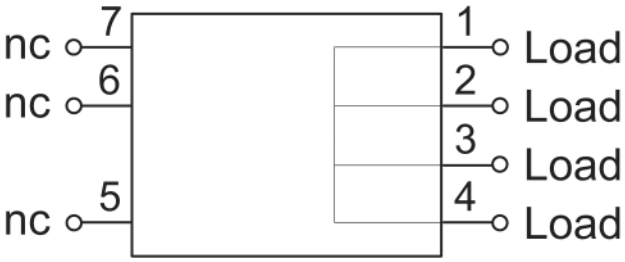

Use

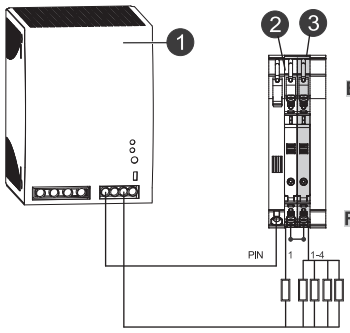

DE 1 Netzteil
2 LOCC-Box Module mit Einspeiseset
3 Verteilerklemme (716448 LOCC-Box-VKL 7-6448)

EN *1 Power Supply*
2 LOCC-Box Modules with Supply Set
3 Distribution Terminal (716448 LOCC-Box-VKL 7-6448)

FR *1 Bloc d'alimentation*
2 LOCC-Box modules avec kit d'alimentation
3 Bornier répartiteur (716448 LOCC-Box-VKL 7-6448)

Use

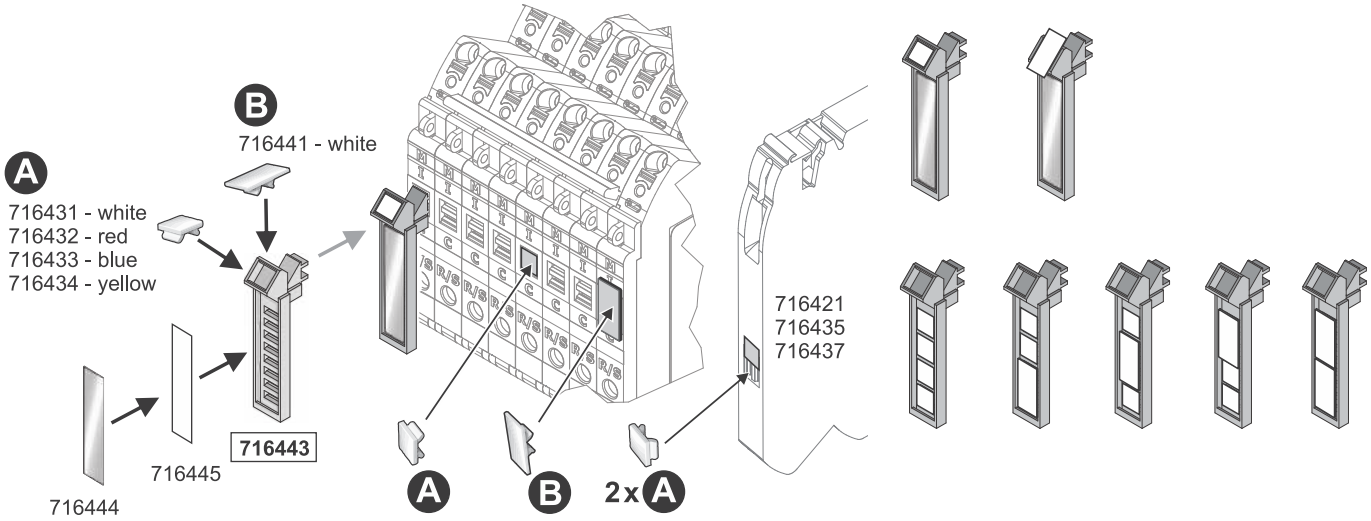

Mounting diagram

HINWEIS / NOTICE / AVIS

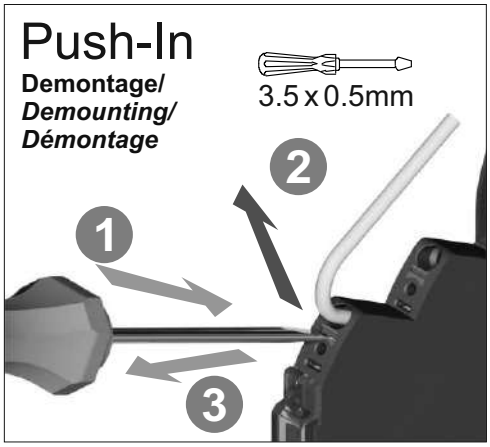

Technical data sheet

IO-Link Gateway for LOCC-Box-Net · LOCC-Box-GWIO 7-6455

Gateway for LOCC-Box-Net versions
Input: LOCCbus (LIN)
Output: IO-Link

Identification

Type	LOCC-Box-GWIO 7-6455
Part No.	716455

Product version

Hardware revision	B
Software version	1.1
Datasheet version	05

Input

Bus system	LOCCbus, base LIN
Access method	Single-Master – Multiple Slave max. 15 functional assemblies
Bus technology	Line
Physical level	1-wire
Data rate	8 Bit + fixed parity (Bit 9)
Transfer protocol	Modified multi-drop
Reverse voltage protection	Yes

Output

Bus system	IO-Link
Transfer rate	38.4 kBaud
Interface	IO-Link Device

General

Rated voltage U_N	DC 12/24 V

Operation voltage range	DC 10–30 V
Rated current	80 mA @ 24 V
Dimensions (w × h × d)	8.1 mm × 107.4 mm × 116.0 mm
Housing material	PA 6.6 (UL 94 V-0, NFF I2, F2)
Mounting	DIN rail mountable TS35 (EN 60715)
Installation position	Any
Degree of protection	IP20 (only as complete system with power terminal and end block)
Connection type	Push-In spring connection 0.25 mm² – 2.5 mm² AWG 24 – AWG 14
Weight/unit	0.105 kg
PU (units)	1

General ambient conditions

Operation temperature range	-25 °C … +50 °C
Storage temperature range	-40 °C … +85 °C
Relative air humidity	max. 90 % not condensing
Vibration resistance	1 g acc. to EN 60068-2-6
Shock resistance	15 g acc. EN 60068-2-27

Certifications/Standards

Conformity	CE UKCA FCC
Certifications	cULus (E170585)
Standards	EN 61000-6-2 EN 61000-6-4 EN 61010-1 EN IEC 61010-2-201 UL 61010-1 UL 61010-2-201 CFR 47 Part 15 Subpart B

Dimensions

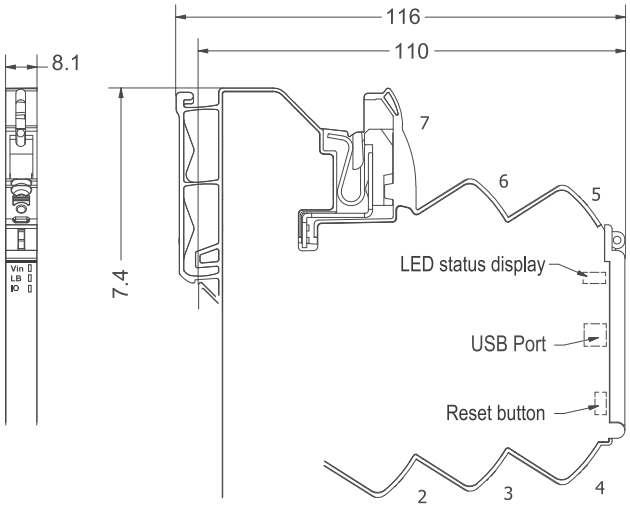

Technical data sheet

IO-Link Gateway for LOCC-Box-Net · LOCC-Box-GWIO 7-6455

PIN assignment

PIN	Signal
1	IO Link (L-)
2	IO Link (C/Q)
3	IO Link (L+)
4	Communication (LIN)
5	0V GND
6	DC + 24V
7	DC + 24V

Use

DE Installation EN *Installation* FR *Installation*

DE 1. Standard Anwendung mit Stromschiene

1 Einspeiseklemme aus Set 716425/716447
2 Überwachungsbaustein – LOCC-Box
3 Endblock aus Set 716425/ 716447
4 Kupferschiene 1 m (716426)
Kupferschienen konfektioniert (716426.xxx.x)
5 Abdeckung Kupferschiene (716427)

EN *1. Standard application with power rail*

1 Supply terminal from set 716425/716447
2 Monitoring Module – LOCC-Box
3 End terminal from set 716425/716447
4 Copper rail 1 m (716426)
Copper bus bars tailored (716426.xxx.x)
5 Cover copper rail (716427)

FR *1. Application standard avec rail d'alimentation*

1 La borne de raccordement au réseau se trouve dans le kit 716425/716447
2 Convertisseur de mesure – LOCC-Box
3 Borne d'extrémité est inclus dans le kit 716425/716447
4 Barre de cuivre (716426)
Barres bus en cuivre sur mesure (716426.xxx.x)
5 Recouvrement pour rail cuivre (716427)

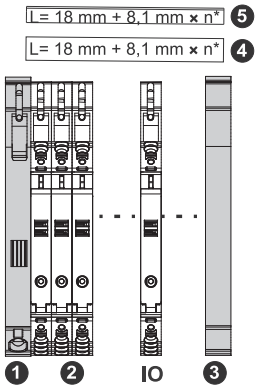

*n= LOCC-Box Module/*Modules/Modules*

DE 2. *Stand-alone* Anwendung

Das LOCC-Box I/O-Link-Gateway kann auch als eigenständiges Gerät verwendet werden.

EN *2. Stand alone application*

The LOCC-Box I/O link gateway can also be used as a stand-alone device.

FR *2. Application standard*

La passerelle de liaison E/S LOCC-Box peut également être utilisée en tant que dispositif autonome.

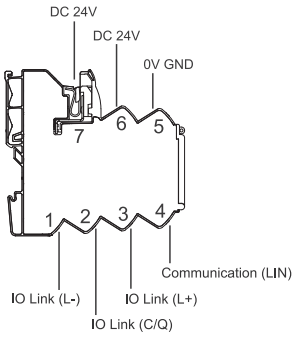

Use

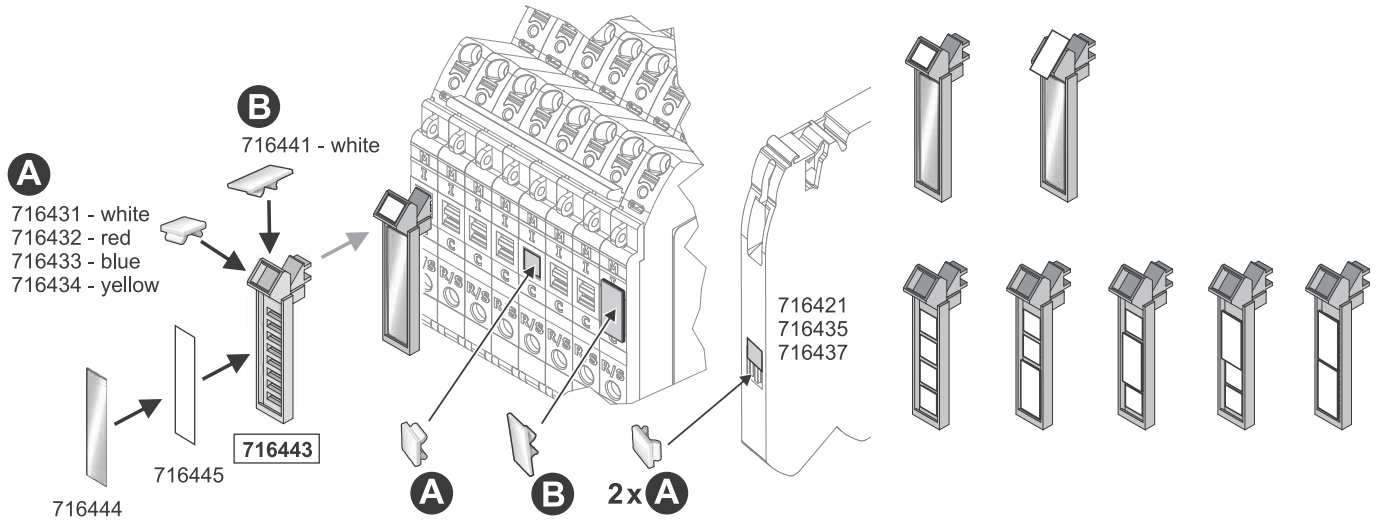

Mounting diagram

DE Verdrahtung **EN *Wiring*** **FR *Câblé*** **ES *Cableado***

HINWEIS / NOTICE / AVIS / AVISO

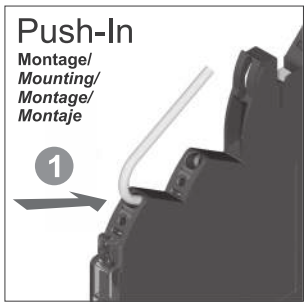

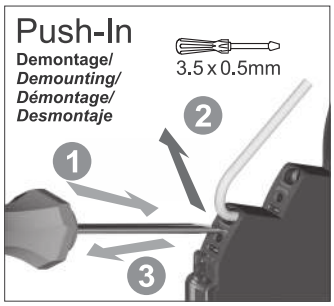

Standard-Werte / *Standard values / Valeur standard / Valores estándar*

Abisolierlänge/ *Stripping Length/ Longueur du dénudage/ Longitud de desaislado*	Querschnitt/ *Cross section/ Section/ Sección transversal*	3.5 x 0.5mm
9/10	0.25 ... 2.5 mm², AWG 24 – 14	
9/10	0.25 ... 2.5 mm², AWG 24 – 14	
9/10	0.25 ... 2.5 mm², AWG 24 – 14	

UL Werte / *UL values /Valeur UL / Valores UL*

9/10	0.25 ... 2.5 mm², AWG 24 – 14 ***Material cable: Cu,*** ***Temperature range (operation): -25°C ≤ Tamb ≤ +70°C***

Mounting diagram

DE Montage
EN *Mounting*
FR *Montage*

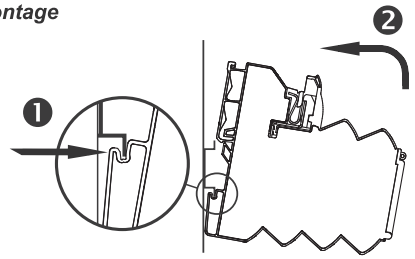

DE Demontage
EN *Dismounting*
FR *Démontage*

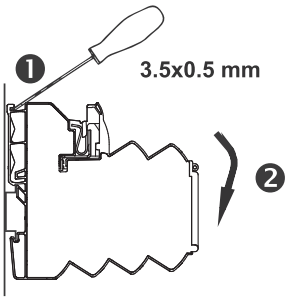

DE Konfiguration
EN *Configuration*
FR *Configuration*

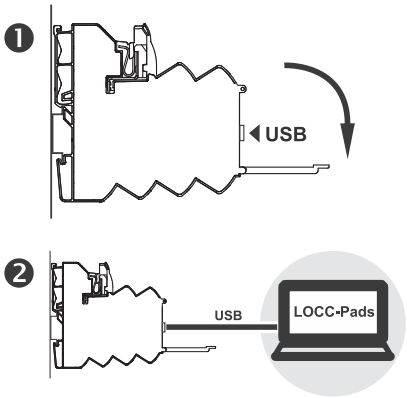

DE
LOCC-Pads
Die kostenlose *LOCC-Pads* Software finden Sie im Downloadbereich von ***www.luetze.de***

EN
LOCC-Pads
The free *LOCC-Pads* software can be found in the download area of ***www.luetze.com***

FR
LOCC-Pads
Le logiciel gratuit *LOCC-Pads* se trouve dans la zone de téléchargement de : ***www.luetze.fr***

Circuit diagram

DE Prinzipschaltbild EN *Block diagram* FR *Schéma de principe*

DE **1. LOCC-Boxen System mit Einspeiseset**
EN ***1. LOCC boxes system with power supply set***
FR ***1. Système de boxes LOCC avec set d'alimentation***

Power supply

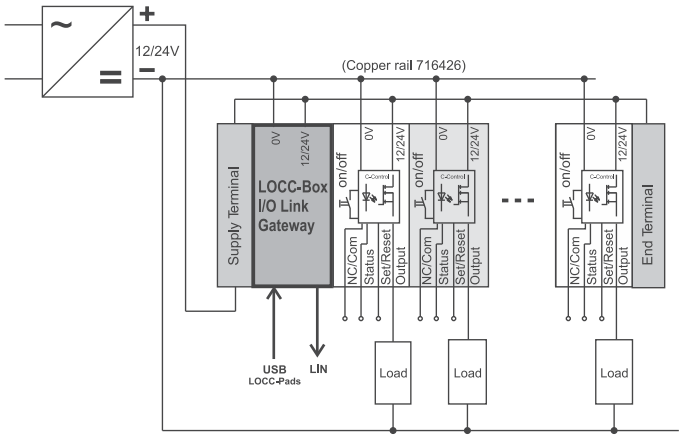

DE Anwendungsbeispiel EN *Application example* FR *Exemple d'application*

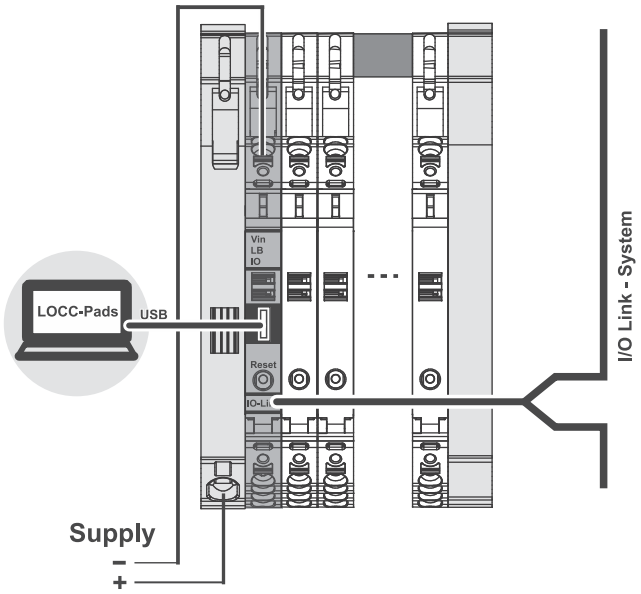

DE **2. LOCC-Boxen System mit Direkteinspeisung**
EN ***2. LOCC boxes system with direct feeding***
FR ***2. Système de boxes LOCC avec alimentation directe***

Power supply

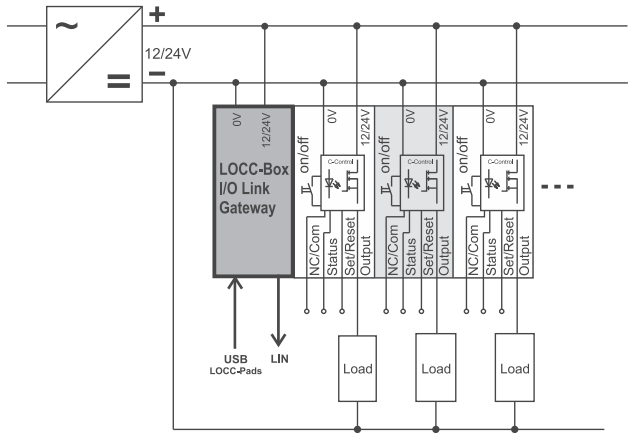

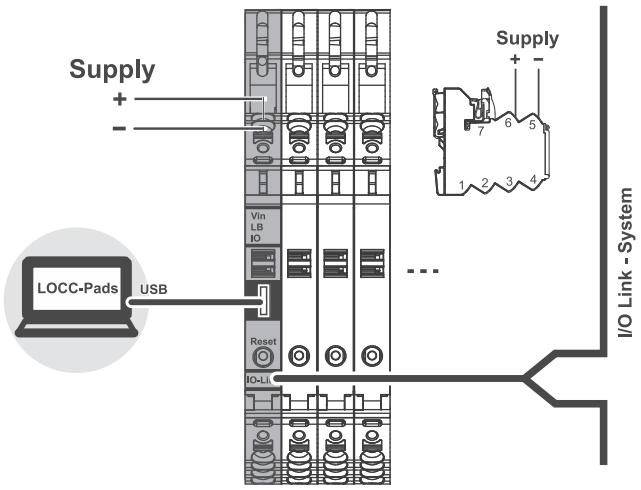

Technical data sheet

Load monitoring · LOCC-Box-GWEC

Gateway for LOCC-Box-Net versions
Input: LOCCbus (LIN)
Output: USB, EtherCAT

Identification

Type	LOCC-Box-GWEC 0-6456
Part No.	716456

Product version

Datasheet version	01

Input

Bus system	LOCCbus, base LIN
Access method	Single-Master - Multiple Slave
Bus technology	Line
Physical level	1-wire
Transfer rate	9600 Baud
Data rate	8 Bit + fixed parity (Bit 9)
Transfer protocol	Modified multi-drop
Operation voltage range	10-32 V
Reverse voltage protection	Yes

Communication internal

Participants	typ. 40, max. 64
Transfer rate	9600 Baud
Bus length	Max. 40 m

Output

Bus system	USB 2.0 Full-Speed, EtherCAT

Transfer rate	USB: 12 Mbit/s EtherCAT: 100 bit/s (IEE 802.3)
Interface	USB: USB connector, Type B EtherCAT: IN, OUT, 2 × RJ45 female connector with galvanic isolation and LEDs

General

Rated voltage U_N	DC 12/24 V
Rated current	55 mA @ 24 V
Status indication	LED L, red - flashing: EEPROM Error, EEPROM not charged LED R, green - shining: ECT Run LED E, green - shining: ECT Error LED C, green - flashing: data traffic with LOCC-Box-Net modules (LOCCbus) Link/Activity: green - 100Base/T-connection, flashes when there is EtherCAT-traffic Connect: yellow - Speed-LED, 100Base/T-connection
Dimensions (w × h × d)	22.5 mm × 99.0 mm × 114.5 mm
Housing material	PA 6.6 (UL 94 V-0)
Mounting	DIN rail mountable TS35 (EN 60715)
Installation position	Any
Degree of protection	IP20
Connection type	Spring terminal 0.14 mm² – 2.5 mm² (with ferrule 1.5 mm²)
Weight/unit	0.13 kg
PU (units)	1

General ambient conditions

Operation temperature range	-25 °C … +50 °C
Storage temperature range	-40 °C … +85 °C
Relative air humidity	max. 90 % not condensing
Shock resistance	15 g acc. EN 60068-2-27

Certifications/Standards

Conformity	CE UKCA
Standards	EN 61000-6-2 EN 61000-6-3

Notes and Comments

Comments	Screw terminal on request

Dimensions

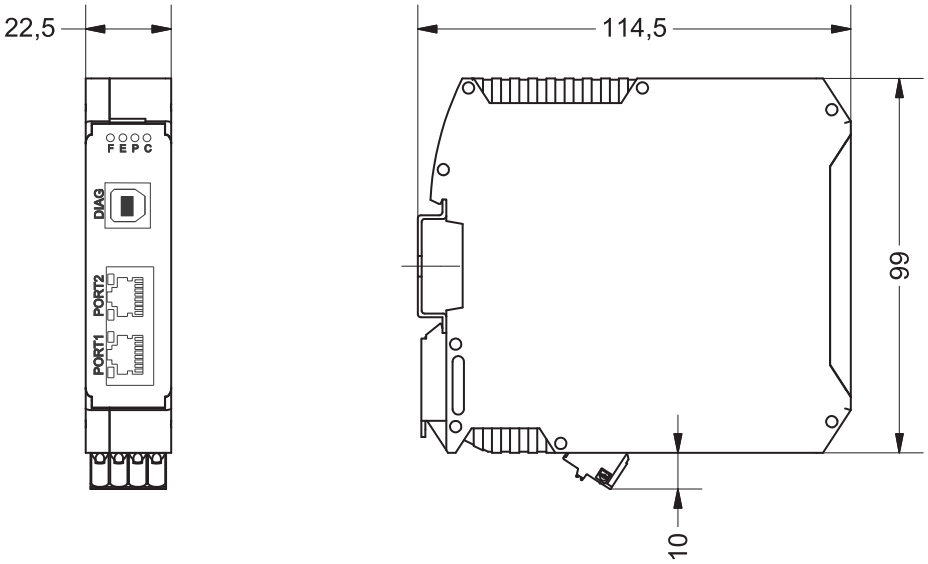

PIN assignment

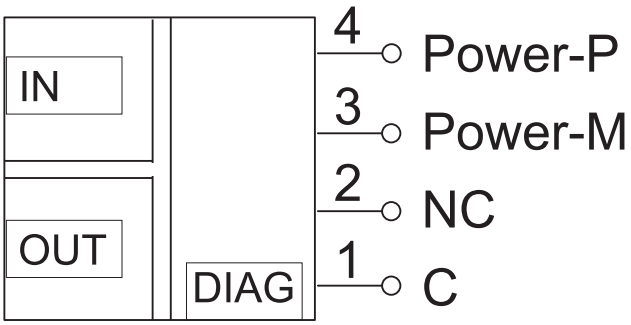

Use

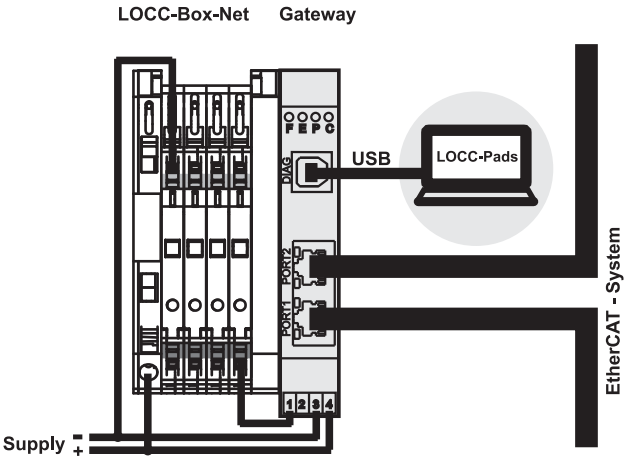

Technical data sheet

Load monitoring · LOCC-Box-GWPN

Gateway for LOCC-Box-Net versions
Input: LOCCbus (LIN)
Output: USB, PROFINET-IO

Identification

Type	LOCC-Box-GWPN 0-6457
Part No.	716457

Product version

Datasheet version	01

Input

Bus system	LOCCbus, base LIN
Access method	Single-Master - Multiple Slave
Bus technology	Line
Physical level	1-wire
Transfer rate	9600 Baud
Data rate	8 Bit + fixed parity (Bit 9)
Transfer protocol	Modified multi-drop
Operation voltage range	10-32 V
Reverse voltage protection	Yes

Communication internal

Participants	typ. 40, max. 84
Transfer rate	9600 Baud
Bus length	Max. 40 m

Output

Bus system	USB 2.0 Full-Speed, PROFINET-IO

Transfer rate	USB: 12 Mbit/s PROFINET-IO: 100 bit/s (IEE 802.3)
Interface	USB: USB connector, Type B PROFINET-IO: Port_1, Port_2, 2 × RJ45 female connector with galvanic isolation and LEDs

General

Rated voltage U_N	DC 12/24 V
Rated current	120 mA @ 24 V
Status indication	LED F, yellow - flashing: identification request (PROFINET) LED E, red - shining: no connection (PROFINET) LED P, green - on: operating voltage is supplied (POWER) LED C, green - flashing: data traffic with LOCC-Box-Net modules (LOCCbus) Link: yellow - 100Base/T-connection Activity green - valid connection, Blanking: data traffic
Dimensions (w × h × d)	22.5 mm × 99.0 mm × 114.5 mm
Housing material	PA 6.6 (UL 94 V-0)
Mounting	DIN rail mountable TS35 (EN 60715)
Installation position	Any
Degree of protection	IP20
Connection type	Spring terminal 0.14 mm² – 2.5 mm² (with ferrule 1.5 mm²)
Weight/unit	0.13 kg
PU (units)	1

General ambient conditions

Operation temperature range	-25 °C … +50 °C
Storage temperature range	-40 °C … +85 °C
Relative air humidity	max. 90 % not condensing
Shock resistance	15 g acc. EN 60068-2-27

Certifications/Standards

Conformity	CE UKCA
Standards	EN 61000-6-2 EN 61000-6-4

Notes and Comments

Comments	Screw terminal on request

Dimensions

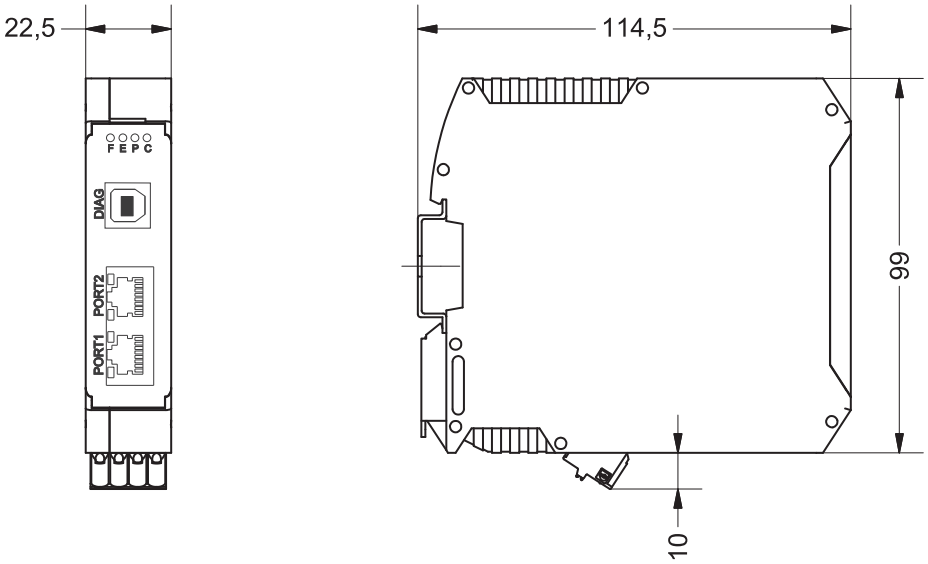

PIN assignment

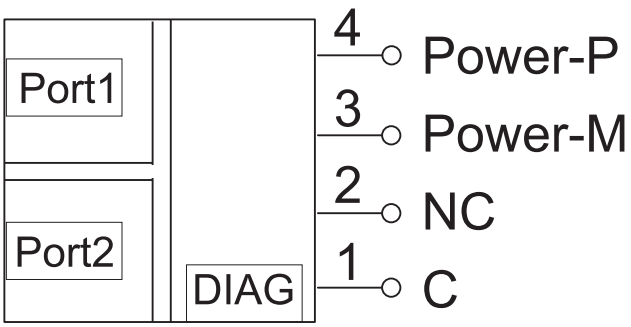

Use

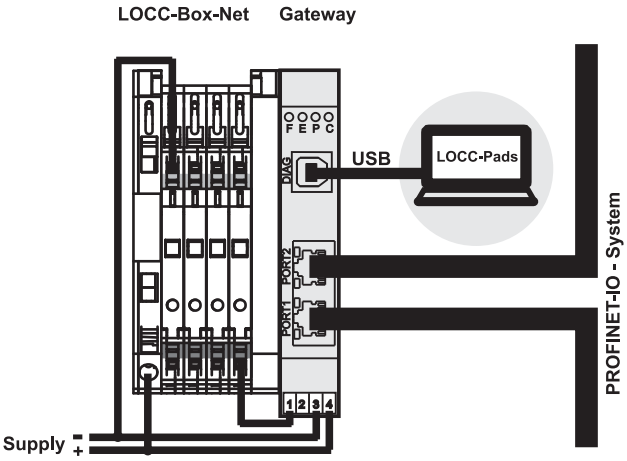

Technical data sheet

Load monitoring · LOCC-Box-GWPB

Gateway for LOCC-Box-Net versions
Input: LOCCbus (LIN)
Output: USB, PROFIBUS-DP

Identification

Type	LOCC-Box-GWPB 0-6458
Part No.	716458

Product version

Datasheet version	01

Input

Bus system	LOCCbus, base LIN
Access method	Single-Master - Multiple Slave
Bus technology	Line
Physical level	1-wire
Transfer rate	9600 Baud
Data rate	8 Bit + fixed parity (Bit 9)
Transfer protocol	Modified multi-drop
Operation voltage range	10-32 V
Reverse voltage protection	Yes

Communication internal

Participants	typ. 40, max. 84
Transfer rate	9600 Baud
Bus length	Max. 40 m

Output

Bus system	USB 2.0 Full-Speed, PROFIBUS-DP

Transfer rate	USB: 12 Mbit/s PROFIBUS-DP: max. 12 Mbit/s
Interface	USB: USB connector, Type B PROFIBUS-DP: Port_1, SUB-D 9-pin with galvanic isolation

General

Rated voltage U_N	DC 12/24 V
Rated current	120 mA @ 24 V
Status indication	LED D, green - shines: data exchange via PROFIBUS-DP LED E, red - different flash codes for diagnosis of PROFIBUS-DP faults LED P, green - on: operating voltage is supplied (POWER) LED C, green - flashing: data traffic with LOCC-Box-Net modules (LOCCbus)
Dimensions (w × h × d)	22.5 mm × 99.0 mm × 114.5 mm
Housing material	PA 6.6 (UL 94 V-0)
Mounting	DIN rail mountable TS35 (EN 60715)
Installation position	Any
Degree of protection	IP20
Connection type	Spring terminal 0.14 mm² – 2.5 mm² (with ferrule 1.5 mm²)
Weight/unit	0.13 kg
PU (units)	1

General ambient conditions

Operation temperature range	-25 °C … +50 °C
Storage temperature range	-40 °C … +85 °C
Relative air humidity	max. 90 % not condensing
Shock resistance	15 g acc. EN 60068-2-27

Certifications/Standards

Conformity	CE UKCA
Standards	EN 61000-6-2 EN 61000-6-4

Notes and Comments

Comments	Screw terminal on request

Dimensions

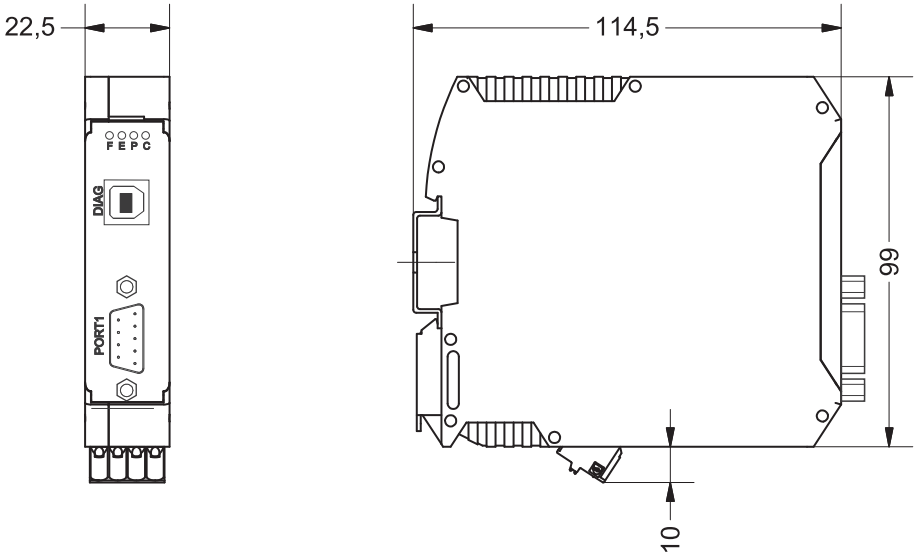

PIN assignment

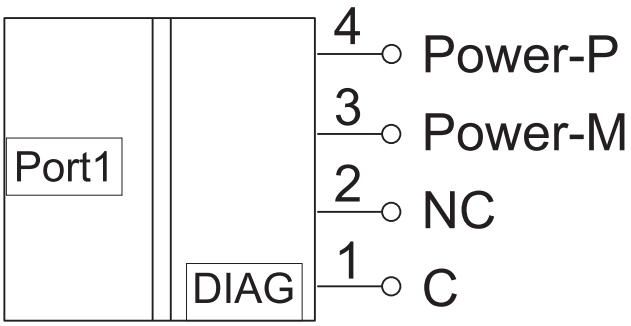

Use

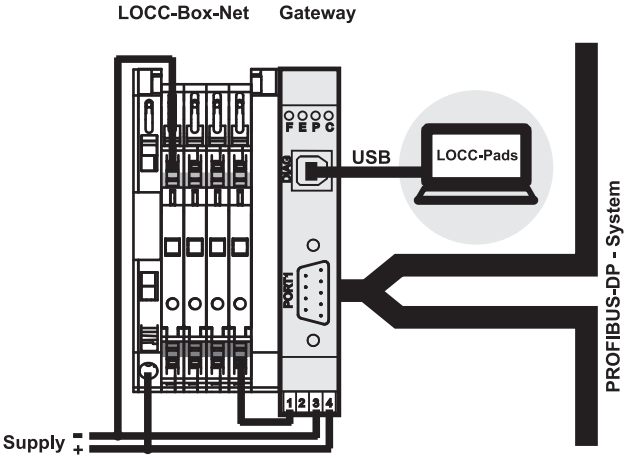

Technical data sheet

Load monitoring · LOCC-Box-GW

Gateway for LOCC-Box-Net versions
Input: LOCCbus (LIN)
Output: USB, RS 232, CANopen

Identification

Type	LOCC-Box-GW 7-6459
Part No.	716459

Product version

Datasheet version	01

Input

Bus system	LOCCbus, base LIN
Access method	Single-Master - Multiple Slave
Bus technology	Line
Physical level	1-wire
Transfer rate	9600 Baud
Data rate	8 Bit + fixed parity
Transfer protocol	Modified multi-drop
Operation voltage range	DC 10–26.4 V
Reverse voltage protection	Yes

Communication internal

Participants	40, max. 254
Transfer rate	9600 Baud
Bus length	Max. 40 m

Output

Bus system	USB 2.0 Full-Speed, RS232, CANopen

Transfer rate	USB: 12 Mbit/s RS232: 600–11500 bit/s CANopen: 10–1000 kbit/s

General

Rated voltage U_N	DC 12/24 V
Rated current	Max. 50 mA
Status indication	LED 1 green/red: USB, RS232, Firmware LED 2 green/red: CANopen
Dimensions (w × h × d)	6.2 mm × 90.0 mm × 115.0 mm
Housing material	PA 6.6 (UL 94 V-0, NFF I2, F2)
Mounting	DIN rail mountable TS35 (EN 60715)
Installation position	Any
Degree of protection	IP20
Connection type	Spring terminal 0.14 mm² – 2.5 mm² (with ferrule 1.5 mm²)
Weight/unit	0.06 kg
PU (units)	1

General ambient conditions

Operation temperature range	-25 °C . . . +50 °C
Storage temperature range	-40 °C . . . +85 °C
Relative air humidity	max. 90 % not condensing
Shock resistance	15 g acc. EN 60068-2-27

Certifications/Standards

Conformity	CE UKCA
Standards	EN 61000-6-2 EN 61000-6-4

Equipment/Spare parts

Accessories	**Labelling sign 4×11 mm, white**: Part-No. 681313 | BZT-0411 | PU: 100 units **Insulation plate, black RAL 9005:** Part-No. 760809 | TP 7-0809 MIC/SNR | PU: 10 units **Laser label A4 not punched, black RAL 9005:** Part-No. 681031 | LEB A4 PW | PU: 10 units

Dimensions

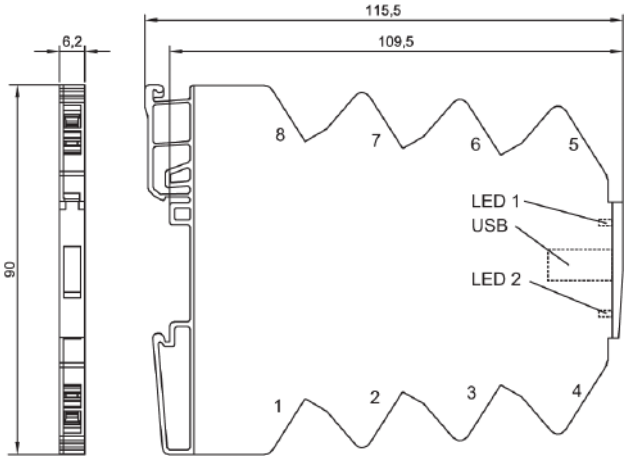

PIN assignment

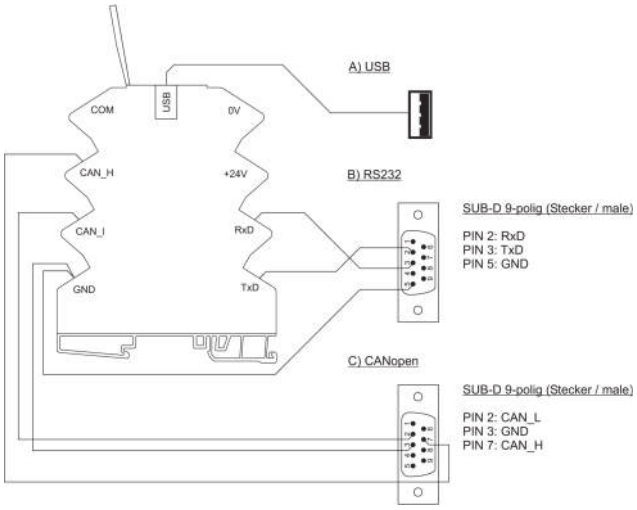

PIN assignment

Use

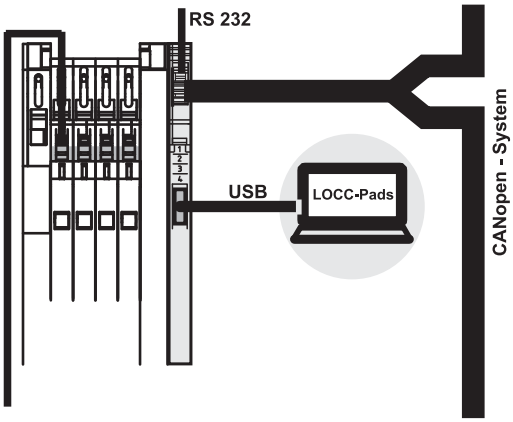

Technical data sheet

Load monitoring · LOCC-Box-M

Electronic circuit breaker rated up to DC 8 A
Single-channel design, adjustable current range: DC 1 A – 8 A
Adjustable characteristics, fast, medium, slow 1, -2, -3

Identification

Type	LOCC-Box-M
Part No.	716480

Product version

Datasheet version	01

Input

Type of function	1-channel 1 pin switching
Rated voltage U_N	DC 12/24 V
Operation voltage range	DC 10–30 V
Rated current I_N	DC 8 A
Reverse voltage protection	Internal electronics

Control input (Set / Reset)

Signal level	DC 12/24 V acc. to EN 61131
OFF	Pulse with falling edge >100 ms, <800 ms
ON	Pulse with falling edge > 1 s

Output

Switching element	MOSFET
Output current	Max. DC 8 A
Voltage drop	Max. 180 mV (8 A)
Status display output	LED green: operating voltage present, no error LED red: error in load circuit

Switch-on capacity	10000 µF
Current range	1 A – 8 A (adjustable via switch)
Characteristic	Fast (1), medium (2), slow 1 (3), slow 2 (4), slow 3 (5) see ’characteristic curves’

Signal output

Signal level	DC 12/24 V: operating voltage on standby, no error, DC 0 V: error, output switched off or manual "OFF"
Switching element	Transistor, collector with pull-up resistance

General

Dimensions (w × h × d)	8.1 mm × 87.0 mm × 92.0 mm
Housing material	PA 6.6 (UL 94 V-0, NFF I2, F2)
Color of the housing	Basalt grey
Mounting	DIN rail mountable TS35 (EN 60715)
Installation position	Any
MTBF	690000 h
Degree of protection	IP20
Connection type	Push-In 0.25 mm² – 2.5 mm² AWG 24 – AWG 14
Weight/unit	0.06 kg
PU (units)	1

General ambient conditions

Operation temperature range	-25 °C … +50 °C
Storage temperature range	-40 °C … +85 °C
Relative air humidity	10 % – 95 %, without condensation
Vibration resistance	4 g acc. to EN 60068-2-6
Shock resistance	15 g acc. EN 60068-2-27

Certifications/Standards

Conformity	CE UKCA
Certifications	FCC Part 15 Class B cULus (E135145) URus (E490188)
Standards	EN 61000-6-2 EN 61000-6-4 UL 60947-5-1

Dimensions

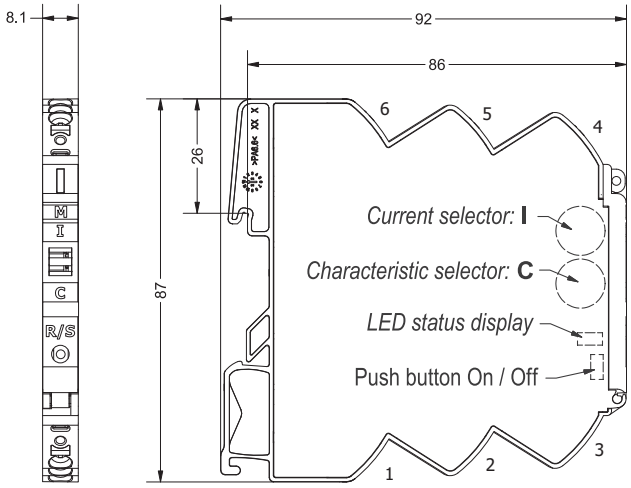

PIN assignment

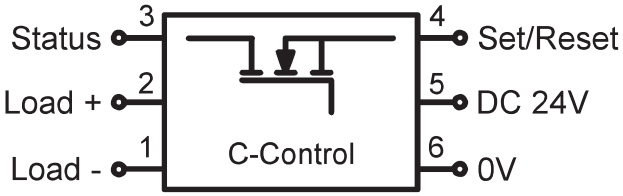

1: Load -
2: Load +
3: Status output
4: Set/Reset
5: DC +24V
6: 0V

1: Characteristic fast

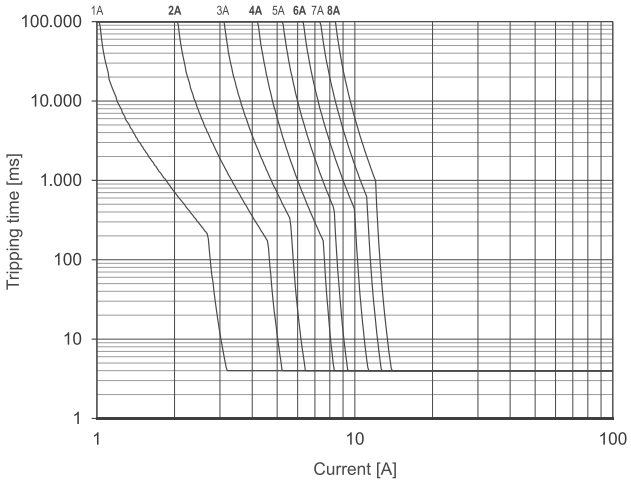

2: Characteristic medium

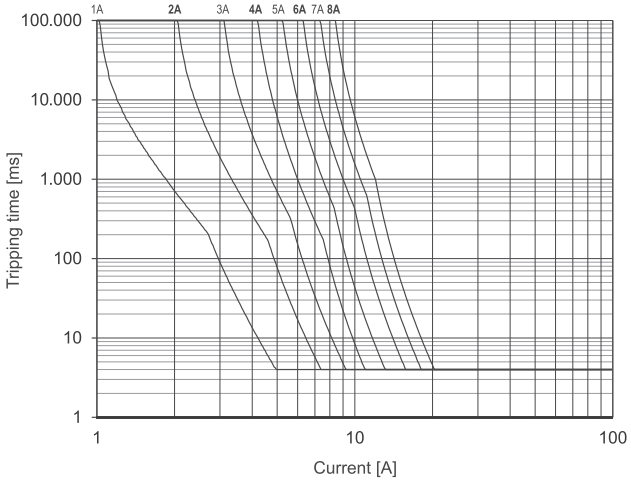

3: Characteristic slow-1

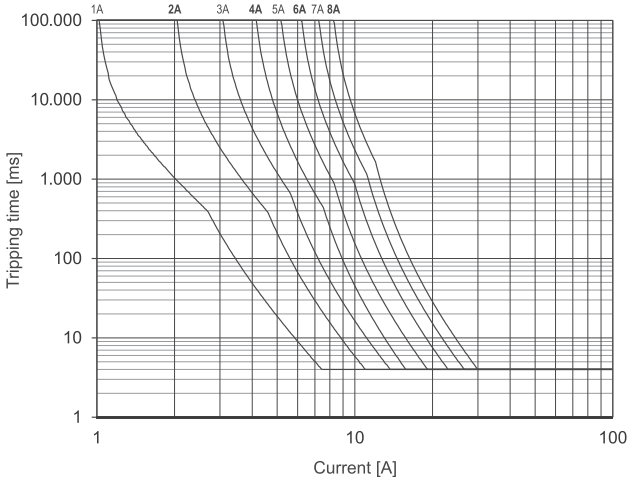

4: Characteristic slow-2

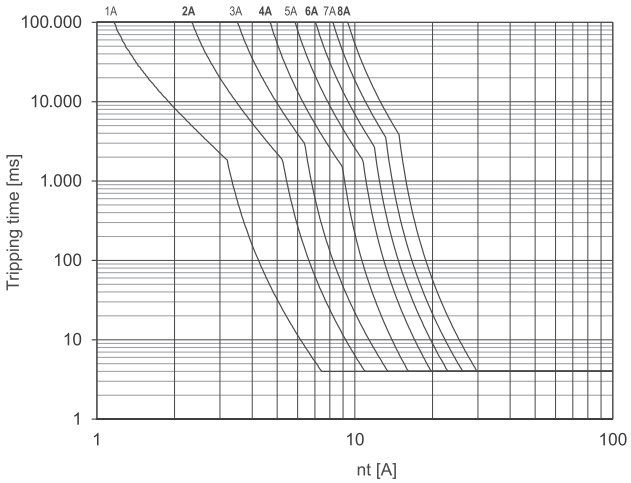

5: Characteristic slow-3

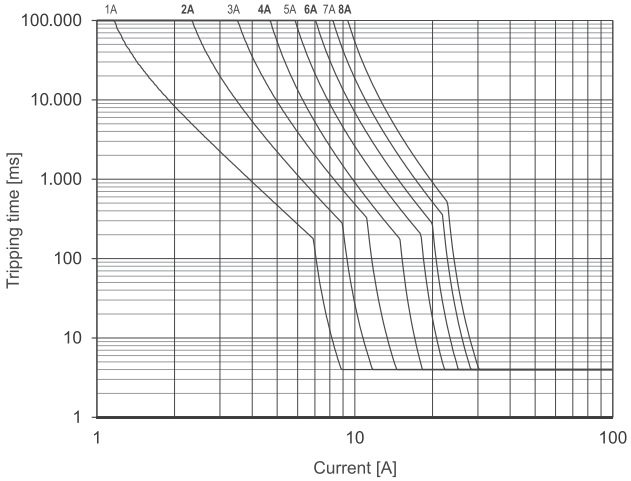

Use

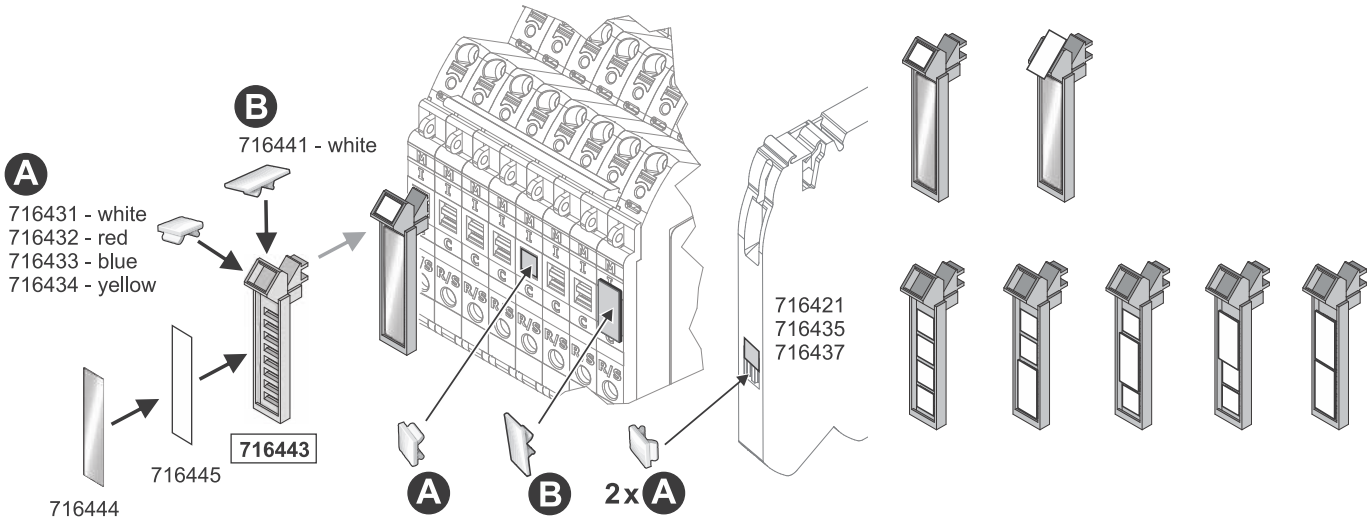

LED status

LED Status, Button, Rotary Switch

LED green	*ON*	*Function is OK**
LED green, flashing 1 Hz	*Overload*	*Load above 90 % of I nominal*
LED green, flashing 5 Hz	*Overload*	*Load above 100 % of I nominal*
LED red	*OFF*	*Module switched off or acknowledged**
LED red, flashing 1 Hz	*Overload*	*Output off due to overload/short circuit**
LED red, flashing 5 Hz	*Error*	*Wiring error – feedback (internal error)*
LED red, flashing shortly	*OFF*	*Output off via remote set/reset*
LED red/green, flashing 1 Hz	*ON*	*Target settings via rotary switch deviate from actual settings.* ***NOTICE: Switching off and on via pushbutton required.***
*Button ****	*ON/OFF*	*Nominal operation: ON/OFF* *Load monitoring tripped: 1st push: acknowledge* *2nd push: ON*
*Rotary Switch (I) – Switch Position***	*Rated current, see page 4.*	
*Rotary Switch (C) – Switch Position***	*Characteristic: 1: fast 2: middle* *3: slow-1 4: slow-2 5: slow-3*	

** If the operating voltage is switched off, the last status is saved (Default).*
button, not by Remote Set/Reset
nly be switched on

ructions

Signal output

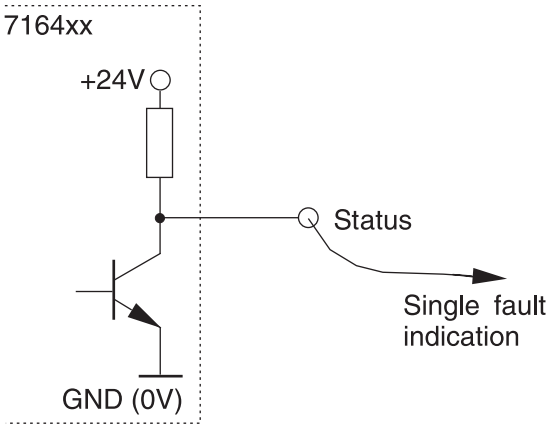

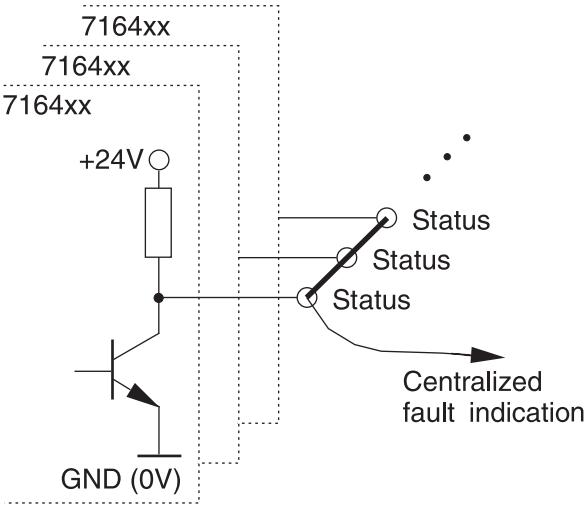

Mounting diagram

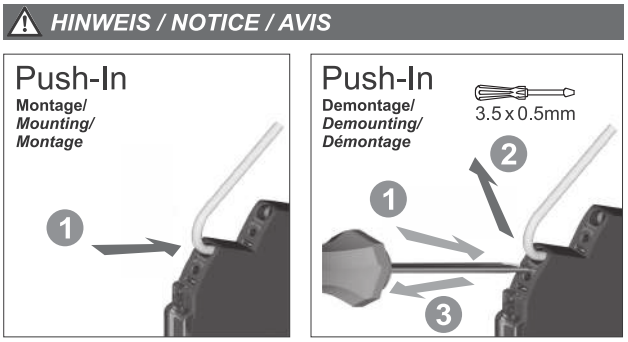

Technical data sheet

Load monitoring · LOCC-Box-M

Electronic load monitoring up to DC 8 A
Single-channel design, Adjustable current range: DC 1 A – 8 A
Adjustable characteristics, fast, medium, slow 1, -2, -3

Identification

Type	LOCC-Box-M
Part No.	716480.0050

Product version

Datasheet version	00

Input

Type of function	1-channel 1 pin switching
Rated voltage U_N	DC 12/24 V
Operation voltage range	DC 10–30 V
Rated current I_N	DC 8 A
Reverse voltage protection	internal electronics

Control input (Set / Reset)

Signal level	DC 12/24 V acc. to EN 61131
OFF	Pulse with falling edge >100 ms, <800 ms
ON	Pulse with falling edge > 1 s

Output

Switching element	MOSFET
Output current	max. DC 8 A
Voltage drop	max. 180 mV (8 A)
Status display output	LED green: operating voltage present, no error LED red: error in load circuit

Switch-on capacity	10000 µF
Current range	1 A – 8 A (adjustable via switch)
Characteristic	fast (1), medium (2), slow 1 (3), slow 2 (4), slow 3 (5) see ’characteristic curves’

Signal output

Signal level	DC 12/24 V: operating voltage on standby, no error, DC 0 V: error, output switched off or manual "OFF"
Switching element	Transistor, collector with pull-up resistance

General

Dimensions (w × h × d)	8.1 mm × 87.0 mm × 92.0 mm
Housing material	PA 6.6 (UL 94 V-0, NFF I2, F2)
Color of the housing	basalt grey
Mounting	DIN rail mountable TS35 (EN 60715)
Installation position	Any
MTBF	690000 h
Degree of protection	IP20
Connection type	Push-In 0.25 mm² – 2.5 mm² AWG 24 – AWG 14
Weight/unit	0.0465 kg
PU (units)	50

General ambient conditions

Operation temperature range	-25 °C … +50 °C
Storage temperature range	-40 °C … +85 °C
Relative air humidity	10 % – 95 %, without condensation
Vibration resistance	4 g acc. to EN 60068-2-6
Shock resistance	15 g acc. EN 60068-2-27

Certifications/Standards

Conformity	CE UKCA
Certifications	FCC Part 15 Class B cULus (E135145) URus (E490188)
Standards	EN 61000-6-2 EN 61000-6-4 UL 60947-5-1

Dimensions

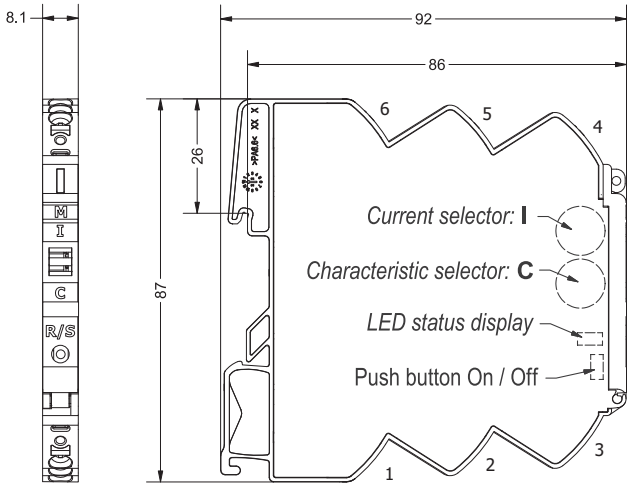

PIN assignment

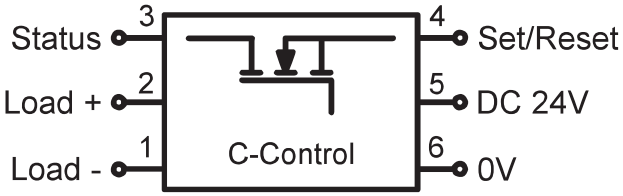

1: Load -
2: Load +
3: Status output
4: Set/Reset
5: DC +24V
6: 0V

1: Characteristic fast

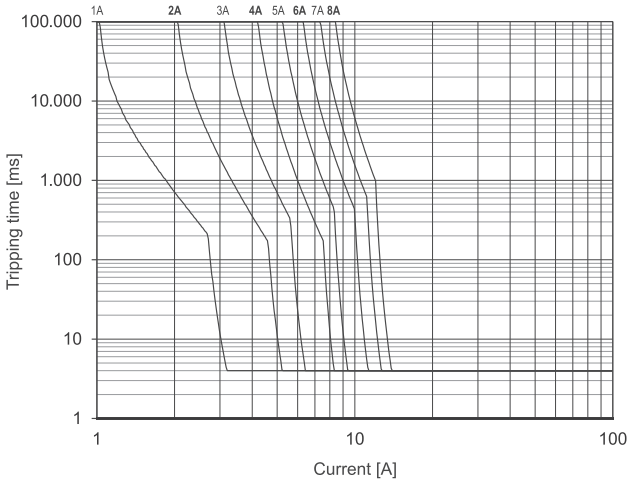

2: Characteristic medium

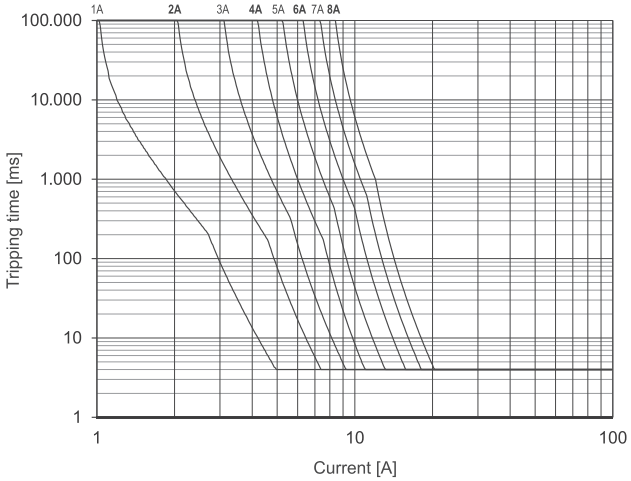

3: Characteristic slow-1

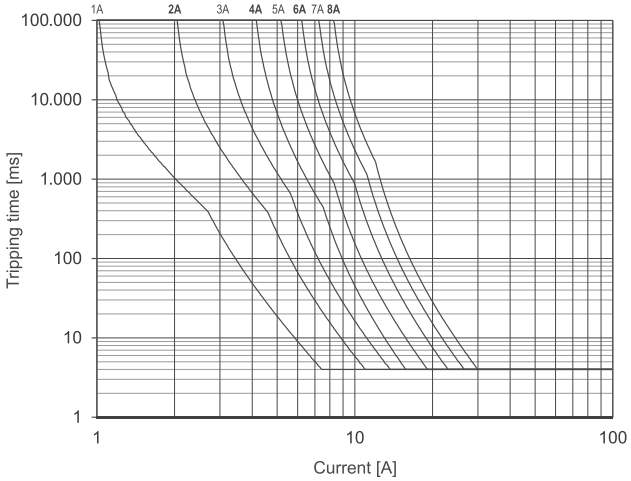

LED status

LED Status, Button, Rotary Switch

LED green	*ON*	*Function is OK**
LED green, flashing 1 Hz	*Overload*	*Load above 90 % of I nominal*
LED green, flashing 5 Hz	*Overload*	*Load above 100 % of I nominal*
LED red	*OFF*	*Module switched off or acknowledged**
LED red, flashing 1 Hz	*Overload*	*Output off due to overload/short circuit**
LED red, flashing 5 Hz	*Error*	*Wiring error – feedback (internal error)*
LED red, flashing shortly	*OFF*	*Output off via remote set/reset*
LED red/green, flashing 1 Hz	*ON*	*Target settings via rotary switch deviate from actual settings.* ***NOTICE: Switching off and on via pushbutton required.***
*Button ****	*ON/OFF*	*Nominal operation: ON/OFF* *Load monitoring tripped: 1st push: acknowledge* *2nd push: ON*
*Rotary Switch (I) – Switch Position***	*Rated current, see page 4.*	
*Rotary Switch (C) – Switch Position***	*Characteristic: 1: fast 2: middle* *3: slow-1 4: slow-2 5: slow-3*	

** If the operating voltage is switched off, the last status is saved (Default).*
*** Accept the setting - after switching on again via the button, not by Remote Set/Reset*
**** Master function - switch off via push button can only be switched on*

Signal output

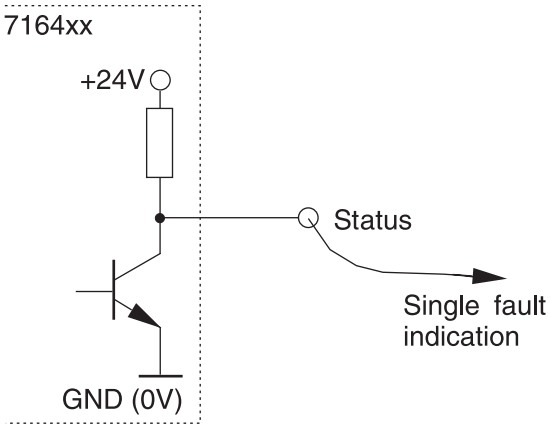

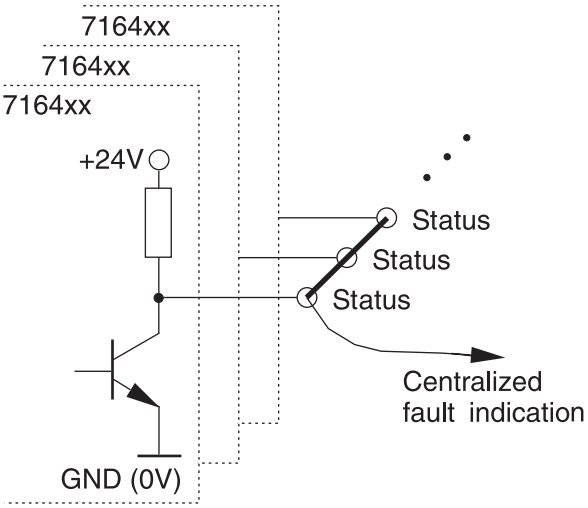

Mounting diagram

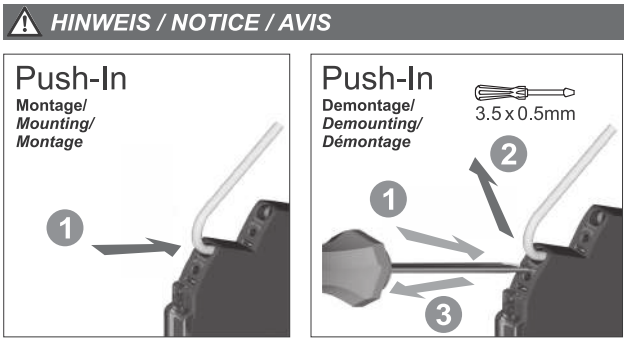

Technical data sheet

Load monitoring · LOCC-Box-M-I

Electronic circuit breaker rated up to DC 8 A, with communication
Single-channel design, parameterizable, adjustable current range: DC 1 A – 8 A
Adjustable characteristics, fast, medium, slow 1, -2, -3

Identification

Type	LOCC-Box-M-I
Part No.	716481

Product version

Datasheet version	01

Input

Type of function	1-channel 1 pin switching
Rated voltage U_N	DC 12/24 V
Operation voltage range	DC 10–30 V
Rated current I_N	DC 8 A
Reverse voltage protection	Internal electronics

Output

Switching element	MOSFET
Output current	Max. DC 8 A
Voltage drop	Max. 180 mV (8 A)
Status display output	LED green: operating voltage present, no error LED red: error in load circuit
Switch-on capacity	10000 µF
Current range	1 A – 8 A (adjustable via switch)
Characteristic	Fast (1), medium (2), slow 1 (3), slow 2 (4), slow 3 (5), can be configured (19) see ’characteristic curves’

Signal output

Signal level	DC 12/24 V: operating voltage on standby, no error, DC 0 V: error, output switched off or manual "OFF"
Switching element	Transistor, collector with pull-up resistance

General

Dimensions (w × h × d)	8.1 mm × 87.0 mm × 92.0 mm
Housing material	PA 6.6 (UL 94 V-0, NFF I2, F2)
Color of the housing	Basalt grey
Mounting	DIN rail mountable TS35 (EN 60715)
Installation position	Any
MTBF	1742151 h
Degree of protection	IP20
Connection type load side	Direct connection with plus and minus
Connection type	Push-In 0.25 mm² – 2.5 mm² AWG 24 – AWG 14
Weight/unit	0.06 kg
PU (units)	1

General ambient conditions

Operation temperature range	-25 °C … +50 °C
Storage temperature range	-40 °C … +85 °C
Relative air humidity	10 % – 95 %, without condensation
Vibration resistance	4 g acc. to EN 60068-2-6
Shock resistance	15 g acc. EN 60068-2-27

Certifications/Standards

Conformity	CE UKCA
Certifications	FCC Part 15 Class B cULus (E135145) URus (E490188)
Standards	EN 61000-6-2 EN 61000-6-4 UL 60947-5-1 UL 2367

Dimensions

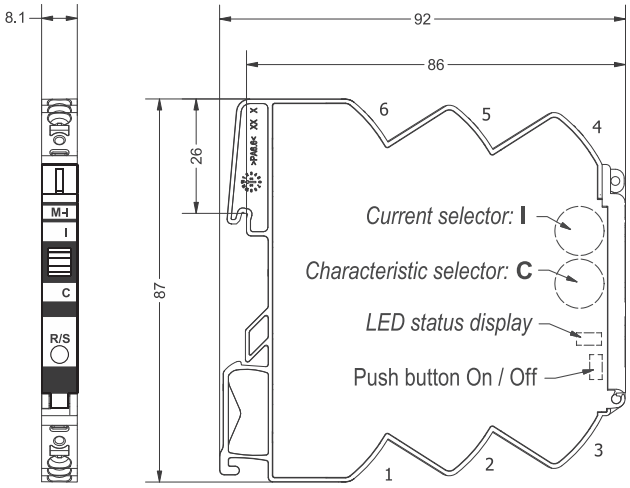

PIN assignment

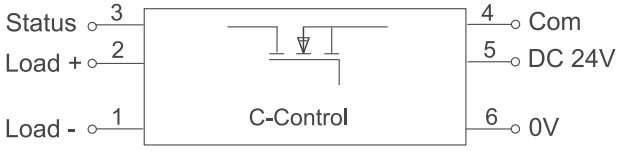

1: Load -
2: Load +
3: Status output
4: Communication
5: DC +24V
6: 0V

1: Characteristic fast

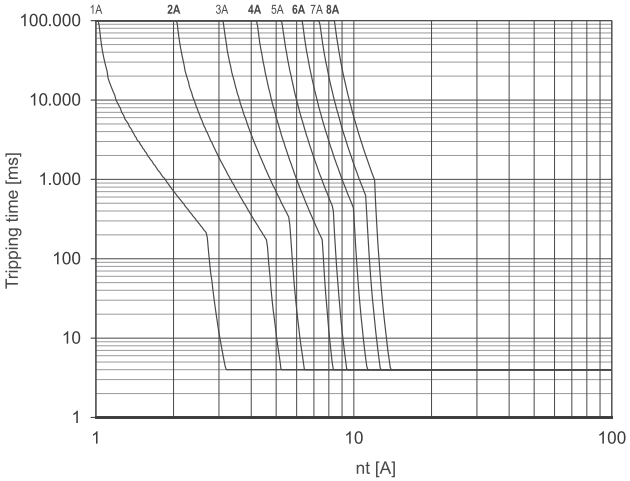

2: Characteristic medium

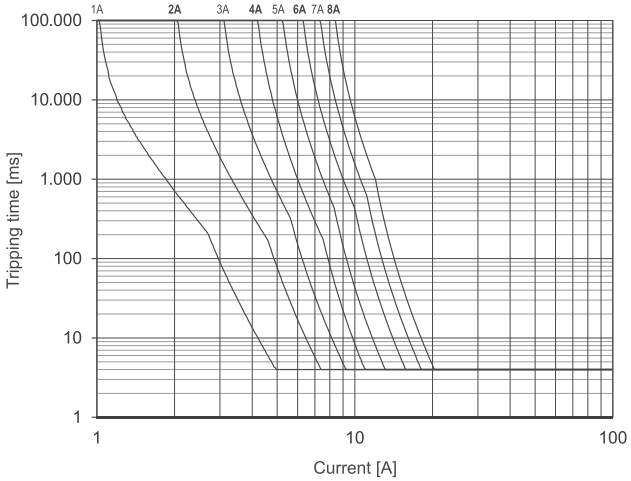

3: Characteristic slow-1

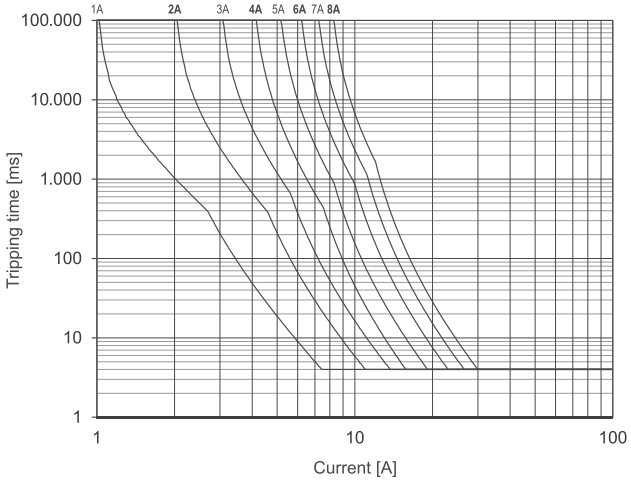

4: Characteristic slow-2

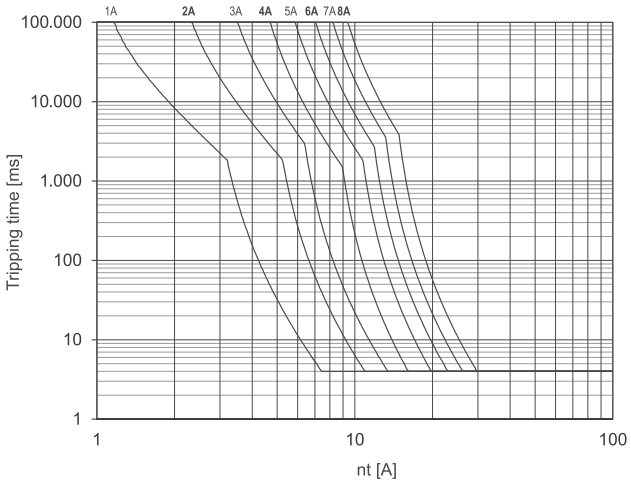

5: Characteristic slow-3

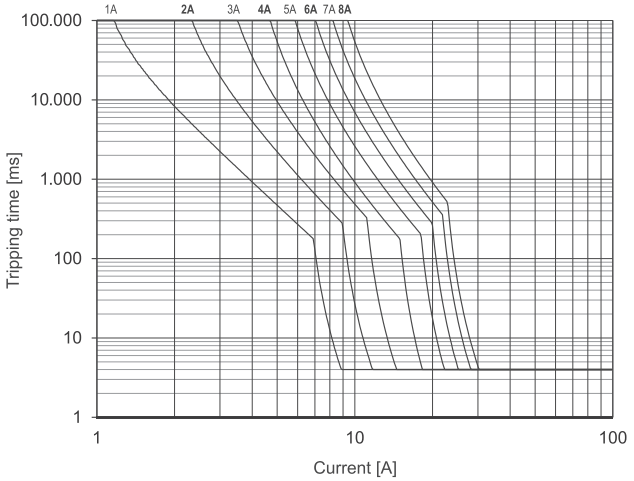

Use

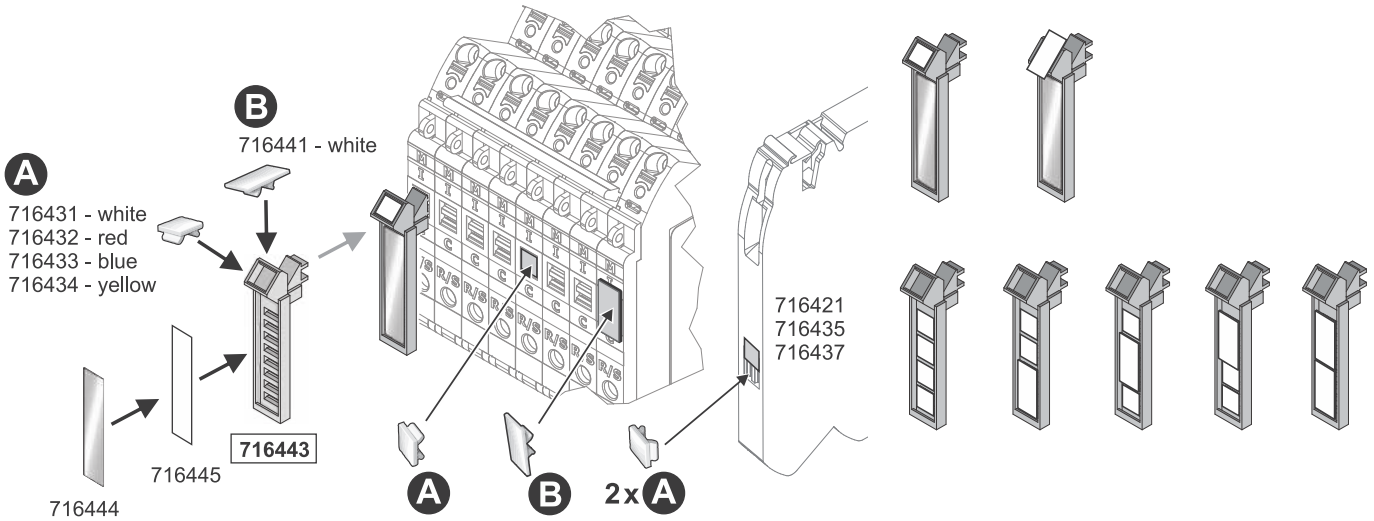

LED status

LED Status, Button, Rotary Switch

LED green	*ON*	*Function is OK**
LED green, flashing 1 Hz	*Overload*	*Load above 90 % of I nominal*
LED green, flashing 5 Hz	*Overload*	*Load above 100 % of I nominal*
LED red	*OFF*	*Module switched off or acknowledged**
LED red, flashing 1 Hz	*Overload*	*Output off due to overload/short circuit**
LED red, flashing 5 Hz	*Error*	*Wiring error – feedback (internal error)*
LED red, flashing shortly	*OFF*	*Output off via remote set/reset*
LED red/green, flashing 1 Hz	*ON*	*Target settings via rotary switch deviate from actual settings.* ***NOTICE: Switching off and on via pushbutton required.***
*Button ****	*ON/OFF*	*Nominal operation: ON/OFF* *Load monitoring tripped: 1st push: acknowledge* *2nd push: ON*
*Rotary Switch (I) – Switch Position***	*Rated current, see page 4.*	
*Rotary Switch (C) – Switch Position***	*Characteristic: 1: fast 2: middle* *3: slow-1 4: slow-2 5: slow-3*	

** If the operating voltage is switched off, the last status is saved (Default).*
button, not by Remote Set/Reset
nly be switched on

ructions

Signal output

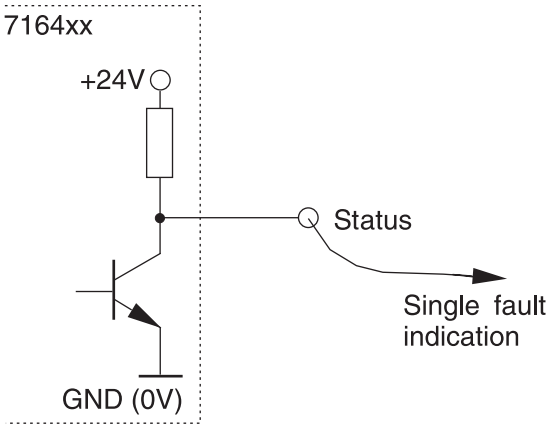

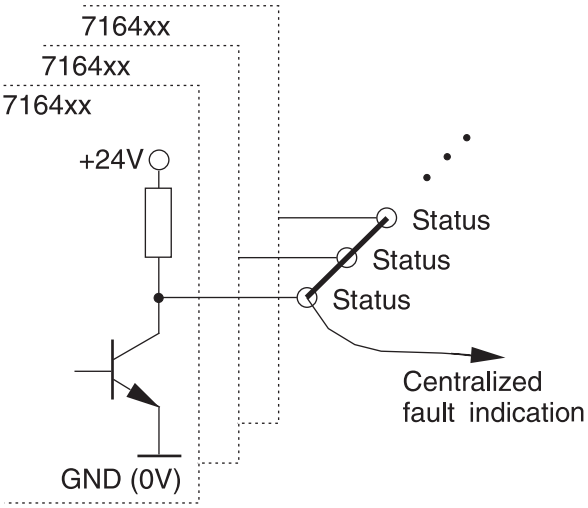

Mounting diagram

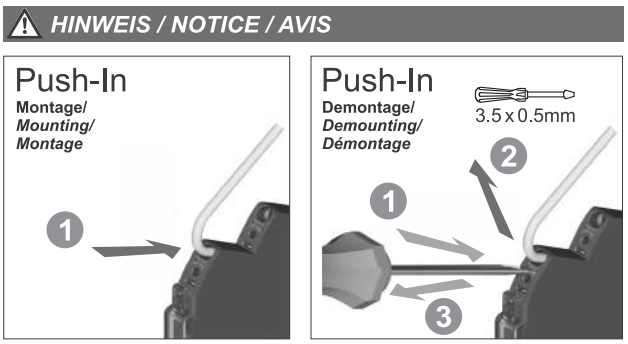

Technical data sheet

Interface Technology · LCIS Relay Module Accessories

Insulated jumper combs for LCIS 2 relays / sockets
8-pin

Identification

Type	LCIS2-BKG-8
Part No.	770934

Product version

Datasheet version	00

Description

Description	To bridge input signal A1 or A2

General

Accessories	Jumper comb 8-pin
Connection type	Plug-in
Contact design	Flat contact 0.8 mm
Pin spacing	16 mm
Contact material	FeZn
Material	PVC hard
Color	grey
Flamability according to UL 94	V0
Dimensions (w × h × d)	118.0 mm × 12.0 mm × 6.0 mm
Weight/unit	0.0064 kg
PU (units)	10

General ambient conditions

Operation temperature range	-40 °C … +70 °C
Storage temperature range	-40 °C … +85 °C

Technical data

Rated current	DC 6 A
Pole number	8

Technical data sheet

Interface Technology · LCIS Relay Module Accessories

Insulated jumper combs for LCIS 2 relays / sockets
2-pin

Identification

Type	LCIS2-BKG-2
Part No.	770935

Product version

Datasheet version	00

Description

Description	To bridge the input and output signal

General

Accessories	Jumper comb 2-pin
Connection type	Plug-in
Contact design	Flat contact 0.8 mm
Pin spacing	13 mm
Contact material	FeZn
Material	PVC hard
Color	grey
Flamability according to UL 94	V0
Dimensions (w × h × d)	25.5 mm × 21.0 mm × 5.0 mm
Weight/unit	0.0008 kg
PU (units)	20

General ambient conditions

Operation temperature range	-40 °C … +70 °C
Storage temperature range	-40 °C … +85 °C

Technical data

Rated current	DC 6 A
Pole number	2

Technical data sheet

Interface Technology · LCIS Relay Module Accessories

Insulated jumper combs for LCIS 3 relays / sockets
8-pin

Identification

Type	LCIS3-BKG-8
Part No.	770936

Product version

Datasheet version	00

Description

Description	To bridge input signal A1 or A2

General

Accessories	Jumper comb 8-pin
Connection type	Plug-in
Contact design	Flat contact 0.8 mm
Pin spacing	31 mm
Contact material	FeZn
Material	PVC hard
Color	grey
Flamability according to UL 94	V0
Dimensions (w × h × d)	220.0 mm × 12.0 mm × 6.0 mm
Weight/unit	0.009 kg
PU (units)	10

General ambient conditions

Operation temperature range	-40 °C … +70 °C
Storage temperature range	-40 °C … +85 °C

Technical data

Rated current	DC 6 A
Pole number	8

Technical data sheet

Interface Technology · LCIS Relay Module Accessories

Insulated jumper combs for LCIS 3 relays / sockets
2-pin

Identification

Type	LCIS3-BKG-2
Part No.	770937

Product version

Datasheet version	00

Description

Description	To bridge the input and output signal

General

Accessories	Jumper comb 2-pin
Connection type	Plug-in
Contact design	Flat contact 0.8 mm
Pin spacing	28 mm
Contact material	FeZn
Material	PVC hard
Color	grey
Flamability according to UL 94	V0
Dimensions (w × h × d)	30.5 mm × 21.0 mm × 5.0 mm
Weight/unit	0.001 kg
PU (units)	20

General ambient conditions

Operation temperature range	-40 °C … +70 °C
Storage temperature range	-40 °C … +85 °C

Technical data

Rated current	DC 6 A
Pole number	2

Technical data sheet

Interface Technology · LCIS Relay Module Accessories

Insulated jumper combs for LCIS 23 relays / sockets
2-pin

Identification

Type	LCIS23-BKG-2
Part No.	770938

Product version

Datasheet version	01

Description

Description	To bridge the output signal

General

Accessories	Jumper comb 2-pin
Connection type	Plug-in
Contact design	Flat contact 0.8 mm
Pin spacing	5 mm
Contact material	FeZn
Material	PVC hard
Color	grey
Flamability according to UL 94	V0
Dimensions (w × h × d)	7.0 mm × 21.0 mm × 2.5 mm
Weight/unit	0.0005 kg
PU (units)	30

General ambient conditions

Operation temperature range	-40 °C … +70 °C
Storage temperature range	-40 °C … +85 °C

Technical data

Rated current	DC 6 A
Pole number	2

Use

DE Anschluss der COM-Klemme
EN Connection of the COM terminal
FR Connexion du terminal COM
ES Conexión terminal COM

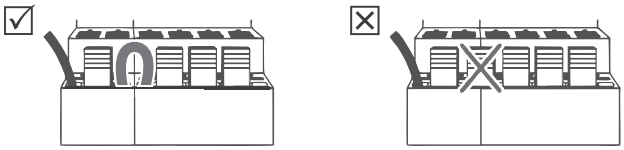

Technical data sheet

Interface Technology · LCIS Relay Module Accessories

Labeling system
Labeling tags 15 × 9.5 mm
single signs

Identification

Type	LCIS23-BZW
Part No.	770939

Product version

Datasheet version	00

Description

Description	Labelling sign, white, accessory for LCIS23, 15 × 9.5 mm Product image similar

General

Material	PA6.6 (UL 94 V2)
Color	white
Flamability according to UL 94	V2
Dimensions	15 × 9.5 mm
Weight/unit	0.0005 kg
PU (units)	50

General ambient conditions

Operation temperature range	-40 °C … +100 °C
Storage temperature range	-40 °C … +100 °C

Notes and Comments

Note	halogen-free

Dimensions

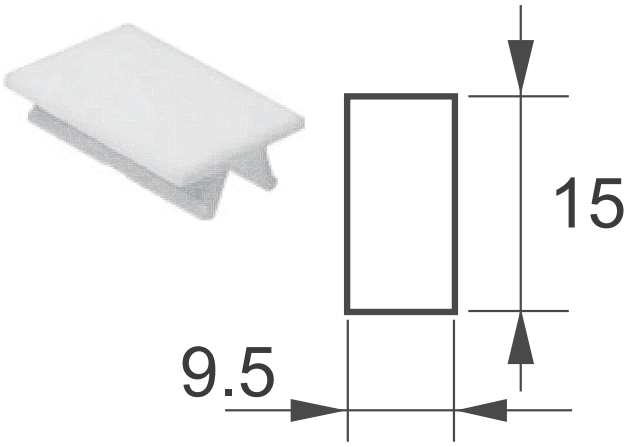

По вопросам продаж и поддержки обращайтесь:

Алматы (727)345-47-04
Ангарск (3955)60-70-56
Архангельск (8182)63-90-72
Астрахань (8512)99-46-04
Барнаул (3852)73-04-60
Белгород (4722)40-23-64
Благовещенск (4162)22-76-07
Брянск (4832)59-03-52
Владивосток (423)249-28-31
Владикавказ (8672)28-90-48
Владимир (4922)49-43-18
Волгоград (844)278-03-48
Вологда (8172)26-41-59
Воронеж (473)204-51-73
Екатеринбург (343)384-55-89
Иваново (4932)77-34-06
Ижевск (3412)26-03-58
Иркутск (395)279-98-46
Казань (843)206-01-48
Калининград (4012)72-03-81
Калуга (4842)92-23-67
Кемерово (3842)65-04-62
Киров (8332)68-02-04
Коломна (4966)23-41-49
Кострома (4942)77-07-48
Краснодар (861)203-40-90
Красноярск (391)204-63-61
Курск (4712)77-13-04
Курган (3522)50-90-47
Липецк (4742)52-20-81
Магнитогорск (3519)55-03-13
Москва (495)268-04-70
Мурманск (8152)59-64-93
Набережные Челны (8552)20-53-41
Нижний Новгород (831)429-08-12
Новокузнецк (3843)20-46-81
Ноябрьск (3496)41-32-12
Новосибирск (383)227-86-73
Омск (3812)21-46-40
Орел (4862)44-53-42
Оренбург (3532)37-68-04
Пенза (8412)22-31-16
Петрозаводск (8142)55-98-37
Псков (8112)59-10-37
Пермь (342)205-81-47
Ростов-на-Дону (863)308-18-15
Рязань (4912)46-61-64
Самара (846)206-03-16
Санкт-Петербург (812)309-46-40
Саратов (845)249-38-78
Севастополь (8692)22-31-93
Саранск (8342)22-96-24
Симферополь (3652)67-13-56
Смоленск (4812)29-41-54
Сочи (862)225-72-31
Ставрополь (8652)20-65-13
Сургут (3462)77-98-35
Сыктывкар (8212)25-95-17
Тамбов (4752)50-40-97
Тверь (4822)63-31-35
Тольятти (8482)63-91-07
Томск (3822)98-41-53
Тула (4872)33-79-87
Тюмень (3452)66-21-18
Ульяновск (8422)24-23-59
Улан-Удэ (3012)59-97-51
Уфа (347)229-48-12
Хабаровск (4212)92-98-04
Чебоксары (8352)28-53-07
Челябинск (351)202-03-61
Череповец (8202)49-02-64
Чита (3022)38-34-83
Якутск (4112)23-90-97
Ярославль (4852)69-52-93

Россия +7(495)268-04-70
Казахстан +7(727)345-47-04
Беларусь +(375)257-127-884
Узбекистан +998(71)205-18-59
Киргизия +996(312)96-26-47

эл.почта: ezd@nt-rt.ru || сайт: https://lutze.nt-rt.ru/